Manufacturing Hydraulic Excellence since 1972

ABER

PME líder '13

COMPETE

QUADRO DE REFERÊNCIA ESTRATÉGICO NACIONAL

UNIÃO EUROPEIA

COMPONENTES HIDRÁULICOS
HYDRAULIC COMPONENTS
EQUIPOS HIDRÁULICOS
HYDRAULIK KOMPONENTEN
COMPOSANTS HYDRAULIQUES
ГИДРАВЛИЧЕСКИЕ КОМПОНЕНТЫ
液壓件

www.aber.eu

HYNESUR

SUMINISTROS DE HIDRÁULICA Y NEUMÁTICA DEL SUR, S.L.

Pol. Ind. Los Palillos, Calle 6 Nave 31
41500 Alcalá de Guadaira
SEVILLA
Tel. 954 047 523 Fax. 955 631 705
hynesur@hynesur.com

DISTRIBUIDOR OFICIAL

Innovation
Quality
Hydraulic
Engineering
Know how

Hydraulic Piston Pumps 04

08 Hydraulic Gear Pumps

PV Series 12

16 Hydraulic Motors

Hydraulic Valves 18

22 Pneumatic Controls

Tipper Scissors 24

26 Hydraulic Power Packs

Oil Tanks 27

33 Power Take Off's

Wet Kits 48

LPIOH 1402-04

No part of this publication may be reproduced, stored in easily accessible locations, transmitted in any form or means, photocopied or copied without the written permission of Aber. The information contained is indicative. ABER is not responsible for typographical and illustrative errors. In cause of doubt please contact ABER.

aber@aber.pt

H SERIES

HIGHER DISPLACEMENT

HIGHER PRESSURE

HIGHER FIABILITY

HYDRAULIC PISTON PUMPS
BH SERIES | STRAIGHT PISTON PUMPS

14 cc/rot (0.9 in³/rot) to
110 cc/rot (6.7 in³/rot)

Robustness and Efficiency

ABER BH Series are very robust, they are equipped with radial and axial bearings. To manufacturer this pumps, ABER uses high resistant material in strategic points.

When at work these pumps show a good performance, with very low noise and a continuous flow of the oil due to the type of pistons of which is built.

DISPLACEMENT cc/rot (in³/rot)	FLANGE AND AXLE OPTIONS							
	DIN 5462 ISO 7653 (EN)	DIN 5463 UNI (UNI)	DIN 9611 AGRICULTURAL (DA)	DIN 9611 INTERIOR (DI)	DIN 5482 MULTIPLIER (DM)	SAE 4 BOLTS (B4/C4)	SAE 2 BOLTS (B2/C2)	8 TEETH 12DP (DB)
UP TO 400 bar (5800 psi)								
52 (3.2)	BHS21716EN	BHS21716UNI	BHS21716DA	-	BHS21716DM	BHS21716B4	BHS21716B2	-
60 (3.7)	BHV21816EN	BHV21816UNI	BHV21816DA	-	BHV21816DM	BHV21816B4	BHV21816B2	-
80 (4.9)	BHV211113EN	BHV211113UNI	BHV211113DA	BHV211113DI	-	BHV211113C4	BHV211113C2	-
UP TO 350 bar (5000 psi)								
14 (0.9)	BHV21313EN	BHV21313UNI	BHV21313DA	-	-	BHV21313B4	BHV21313B2	BHV21313DB
UP TO 320 bar (4600 psi)								
19 (1.2)	BHV21316EN	BHV21316UNI	BHV21316DA	-	BHV21316DM	BHV21316B4	BHV21316B2	BHV21316DB
25 (1.5)	BHV21416EN	BHV21416UNI	BHV21416DA	-	BHV21416DM	BHV21416B4	BHV21416B2	BHV21416DB
32 (2.0)	BHV21516EN	BHV21516UNI	BHV21516DA	-	BHV21516DM	BHV21516B4	BHV21516B2	BHV21516DB
40 (2.4)	BHV21616EN	BHV21616UNI	BHV21616DA	-	BHV21616DM	BHV21616B4	BHV21616B2	BHV21616DB
45 (2.7)	BHV21716EN	BHV21716UNI	BHV21716DA	-	BHV21716DM	BHV21716B4	BHV21716B2	BHV21716DB
50 (3.1)	BHT25519EN	BHT25519UNI	BHT25519DA	-	-	BHT25519B4	BHT25519B2	-
60 (3.7)	BHT25619EN	BHT25619UNI	BHT25619DA	-	-	BHT25619B4	BHT25619B2	BHT25619DB
80 (4.9)	BHT22819EN	BHT22819UNI	BHT22819DA	BHT22819DI	-	BHT22819B4	BHT22819B2	-
86 (5.2)	BHV25913EN	BHV25913UNI	BHV25913DA	BHV25913DI	-	BHV25913B4	BHV25913B2	-
UP TO 250 bar (3600 psi)								
32 (2.0)	BHZ25319EN	BHZ25319UNI	BHZ25319DA	-	-	BHZ25319B4	BHZ25319B2	BHZ25319DB
40 (2.4)	BHZ25419EN	BHZ25419UNI	BHZ25419DA	-	-	BHZ25419B4	BHZ25419B2	BHZ25419DB
50 (3.1)	BHZ25519EN	BHZ25519UNI	BHZ25519DA	-	-	BHZ25519B4	BHZ25519B2	BHZ25519DB
60 (3.7)	BHZ25619EN	BHZ25619UNI	BHZ25619DA	-	-	BHZ25619B4	BHZ25619B2	BHZ25619DB
70 (4.3)	BHZ25716EN	BHZ25716UNI	BHZ25716DA	-	-	BHZ25716B4	BHZ25716B2	-
80 (4.9)	BHZ25719EN	BHZ25719UNI	BHZ25719DA	-	-	BHZ25719B4	BHZ25719B2	-
110 (6.7)	BHZ25916EN	BHZ25916UNI	BHZ25916DA	BHZ25916DI	-	BHZ25916B4	BHZ25916B2	-

ABER is constantly engaged in improving its products and therefore reserves itself the right to modify without any further notice the characteristics shown.

HYDRAULIC GEAR PUMPS
B2 SERIES

12 cc/rot (0.7 in³/rot) to
50 cc/rot (3.1 in³/rot)

Small, Robustness

Gear pump with fixed and bi-direccional sence of flow.

B2TU SERIES

UNI-DIRECTIONAL

REAR INLET/OUTLET

DISPLACEMENT cc/rot (in³/rot)	MAXIMUM OPERATING PRESSURE bar (psi)	MINIMUM CONTINUOUS ROTATION rpm	MAXIMUM CONTINUOUS ROTATION rpm	FLANGE AND AXLE OPTIONS			
				DIN 5462 ISO 7653 (EN)	DIN 5463 UNI (UNI)	SAE B 4 BOLTS (B4)	SAE B 2 BOLTS (B2)
12 (0.7)	280 (4000)	500	2000	B24TU12	B23TU12	B2B4TU12	B2B2TU12
16 (1.0)	280 (4000)	500	2000	B24TU16	B23TU16	B2B4TU16	B2B2TU16
20 (1.2)	260 (3800)	500	2000	B24TU20	B23TU20	B2B4TU20	B2B2TU20
26 (1.6)	250 (3600)	500	2000	B24TU25	B23TU25	B2B4TU25	B2B2TU25
32 (2.0)	240 (3500)	500	2000	B24TU32	B23TU32	B2B4TU32	B2B2TU32
39 (2.4)	210 (3000)	500	2000	B24TU40	B23TU40	B2B4TU40	B2B2TU40
50 (3.1)	190 (2700)	500	2000	B24TU50	B23TU50	B2B4TU50	B2B2TU50

B2T SERIES

BI-DIRECTIONAL

REAR INLET/OUTLET

DISPLACEMENT cc/rot (in³/rot)	MAXIMUM OPERATING PRESSURE bar (psi)	MINIMUM CONTINUOUS ROTATION rpm	MAXIMUM CONTINUOUS ROTATION rpm	FLANGE AND AXLE OPTIONS			
				DIN 5462 ISO 7653 (EN)	DIN 5463 UNI (UNI)	SAE B 4 BOLTS (B4)	SAE B 2 BOLTS (B2)
12 (0.7)	280 (4000)	500	2000	B24T12	B23T12	B2B4T12	B2B2T12
16 (1.0)	280 (4000)	500	2000	B24T16	B23T16	B2B4T16	B2B2T16
20 (1.2)	260 (3800)	500	2000	B24T20	B23T20	B2B4T20	B2B2T20
26 (1.6)	250 (3600)	500	2000	B24T25	B23T25	B2B4T25	B2B2T25
32 (2.0)	240 (3500)	500	2000	B24T32	B23T32	B2B4T32	B2B2T32
39 (2.4)	210 (3000)	500	2000	B24T40	B23T40	B2B4T40	B2B2T40
50 (3.1)	190 (2700)	500	2000	B24T50	B23T50	B2B4T50	B2B2T50

ABER is constantly engaged in improving its products and therefore reserves itself the right to modify, without any further notice the characteristics shown.

HYDRAULIC PISTON PUMPS

BHD SERIES | STRAIGHT PISTON PUMPS

40 cc/rot (2.4 in³/rot) to 125 cc/rot (7.6 in³/rot)

Two Oil Outlets

Straight Piston Pump with two outlets, which work on independent pressure and on independent circuits, when use to serve two independent oil circuits.

DISPLACEMENT cc/rot (in³/rot)	FLANGE AND AXLE OPTIONS					
	DIN 5462 ISO 7653 (EN)	DIN 5463 UNI (UNI)	DIN 9611 AGRICULTURAL (DA)	DIN 9611 INTERIOR (DI)	SAE 4 BOLTS (B4/C4)	SAE 2 BOLTS (B2/C2)
UP TO 400 bar (5800 psi)						
45 + 45 (2.7 + 2.7)	BHD45+45EN	BHD45+45UNI	BHD45+45DA	BHD45+45DI	BHD45+45C4	BHD45+45C2
65 + 22 (4.0 + 1.3)	BHD65+22EN	BHD65+22UNI	BHD65+22DA	BHD65+22DI	BHD65+22C4	BHD65+22C2
UP TO 300 bar (4300 psi)						
20 + 20 (1.2 + 1.2)	BHD20+20EN	BHD20+20UNI	BHD20+20DA	-	BHD20+20B4	BHD20+20B2
25 + 25 (1.5 + 1.5)	BHD25+25EN	BHD25+25UNI	BHD25+25DA	-	BHD25+25B4	BHD25+25B2
30 + 30 (1.8 + 1.8)	BHD30+30EN	BHD30+30UNI	BHD30+30DA	-	BHD30+30B4	BHD30+30B2
40 + 40 (2.4 + 2.4)	BHD40+40EN	BHD40+40UNI	BHD40+40DA	BHD40+40DI	BHD40+40B4	BHD40+40B2
60 + 30 (3.7 + 1.8)	BHD60+30EN	BHD60+30UNI	BHD60+30DA	BHD60+30DI	BHD60+30B4	BHD60+30B2
80 + 21 (4.9 + 1.3)	BHD80+21EN	BHD80+21UNI	BHD80+21DA	BHD80+21DI	BHD80+21C4	BHD80+21C2
53 + 53 (3.2 + 3.2)	BHD53+53EN	BHD53+53UNI	BHD53+53DA	BHD53+53DI	BHD53+53C4	BHD53+53C2
80 + 27 (4.9 + 1.6)	BHD80+27EN	BHD80+27UNI	BHD80+27DA	BHD80+27DI	BHD80+27C4	BHD80+27C2
UP TO 250 bar (3600 psi)						
50 + 50 (3.1 + 3.1)	BHD50+50EN	BHD50+50UNI	BHD50+50DA	BHD50+50DI	BHD50+50B4	BHD50+50B2
72 + 38 (4.4 + 2.3)	BHD72+38EN	BHD72+38UNI	BHD72+38DA	BHD72+38DI	BHD72+38B4	BHD72+38B2
83 + 42 (5.1 + 2.6)	BHD83+42EN	BHD83+42UNI	BHD83+42DA	BHD83+42DI	BHD83+42B4	BHD83+42B2

HYDRAULIC PISTON PUMPS

BID SERIES | BENT AXIS PISTON PUMPS

80 cc/rot (4.9 in³/rot) to 140 cc/rot (8.5 in³/rot)

Two Oil Outlets

Bent Axis Piston Pump with two outlets, which work on independent pressure and on independent circuits, when use to serve two independent oil circuits.

DISPLACEMENT cc/rot (in³/rot)	FLANGE AND AXLE OPTIONS				
	DIN 5462 ISO 7653 (EN)	DIN 9611 AGRICULTURAL (DA)	DIN 9611 INTERIOR (DI)	SAE 4 BOLTS (B4/C4)	SAE 2 BOLTS (B2/C2)
UP TO 350 bar (5000 psi)					
57 + 28 (3.5 + 1.7)	BID57+28P	BID57+28PDA	BID57+28PDI	BID57+28PB4	BID57+28PB2
38 + 37 (2.3 + 2.3)	BID40+40P	BID40+40PDA	BID40+40PDI	BID40+40PB4	BID40+40PB2
80 + 38 (4.9 + 2.3)	BID80+40H	BID80+40HDA	BID80+40HDI	BID80+40HC4	BID80+40HC2
UP TO 300 bar (4300 psi)					
58 + 60 (3.5 + 3.7)	BID55+55H	BID55+55HDA	BID55+55HDI	BID55+55HC4	BID55+55HC2
70 + 66 (4.3 + 4.0)	BID70+70H	BID70+70HDA	BID70+70HDI	BID70+70HC4	BID70+70HC2

ABER is constantly engaged in improving its products and, therefore, reserves itself the right to modify without any further notice the characteristics shown.

HYDRAULIC GEAR PUMPS
B3R SERIES | REINFORCED PUMPS

38 cc/rot (2.3 in³/rot) to 150 cc/rot (9.2 in³/rot)

Medium, Stronger

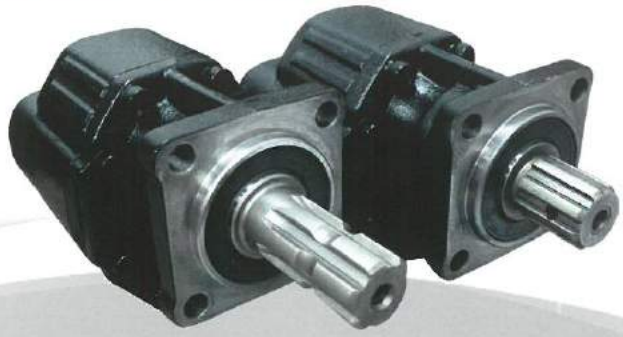

Gear pump with fixed and bi-direccional sence of flow, double support by tapper roller bearings on the main shaft.

B3TR SERIES

BI-DIRECTIONAL

REAR INLET/OUTLET

DISPLACEMENT cc/rot (in³/rot)	MAXIMUM OPERATING PRESSURE bar (psi)	MINIMUM CONTINUOUS ROTATION rpm	MAXIMUM CONTINUOUS ROTATION rpm	FLANGE AND AXLE OPTIONS	
				DIN 5462 ISO 7653 (EN)	DIN 9611 AGRICULTURAL (DA)
38 (2.3)	280 (4000)	500	2800	B34TR38	B34TR38DA
52 (3.2)	280 (4000)	500	2500	B34TR52	B34TR52DA
61 (3.7)	260 (3800)	500	2000	B34TR61	B34TR61DA
70 (4.3)	250 (3600)	500	2000	B34TR70	B34TR70DA
82 (5.0)	250 (3600)	500	1800	B34TR82	B34TR82DA
91 (5.6)	250 (3600)	500	1800	B34TR90	B34TR90DA
102 (6.2)	250 (3600)	500	1800	B34TR105	B34TR105DA
116 (7.1)	250 (3600)	500	1800	B34TR115	B34TR115DA
125 (7.6)	240 (3500)	500	1800	B34TR125	B34TR125DA
150 (9.2)	210 (3000)	500	1600	B34TR150	B34TR150DA

To order the UNI-DIRECCIONAL version, you must add "U" to the pump Ref.
Example:
B34TUR82

To order the SIDE and REAR INLET/OUTLET version, you must replace "T" for "GT in the pump Ref.
Example:
B34GTR82

B3GR SERIES

BI-DIRECTIONAL

SIDE INLET/OUTLET

DISPLACEMENT cc/rot (in³/rot)	MAXIMUM OPERATING PRESSURE bar (psi)	MINIMUM CONTINUOUS ROTATION rpm	MAXIMUM CONTINUOUS ROTATION rpm	FLANGE AND AXLE OPTIONS	
				DIN 5462 ISO 7653 (EN)	DIN 9611 AGRICULTURAL (DA)
38 (2.3)	280 (4000)	500	2800	B34GR38	B34GR38DA
52 (3.2)	280 (4000)	500	2500	B34GR52	B34GR52DA
61 (3.7)	260 (3800)	500	2000	B34GR61	B34GR61DA
70 (4.3)	250 (3600)	500	2000	B34GR70	B34GR70DA
82 (5.0)	250 (3600)	500	1800	B34GR82	B34GR82DA
91 (5.6)	250 (3600)	500	1800	B34GR90	B34GR90DA
102 (6.2)	250 (3600)	500	1800	B34GR105	B34GR105DA
116 (7.1)	250 (3600)	500	1800	B34GR115	B34GR115DA
125 (7.6)	240 (3500)	500	1800	B34GR125	B34GR125DA
150 (9.2)	210 (3000)	500	1600	B34GR150	B34GR150DA

ABER is constantly engaged in improving its products and, therefore, reserves itself the right to modify, without any further notice the characteristics shown.

HYDRAULIC GEAR PUMPS
B3 SERIES

38 cc/rot (2.3 in³/rot) to 150 cc/rot (9.2 in³/rot)

Medium, Faster

Gear pump with fixed and bi-direccional sence of flow.

B3T SERIES

BI-DIRECTIONAL

REAR INLET/OUTLET

DISPLACEMENT cc/rot (in³/rot)	MAXIMUM OPERATING PRESSURE bar (psi)	MINIMUM CONTINUOUS ROTATION rpm	MAXIMUM CONTINUOUS ROTATION rpm	FLANGE AND AXLE OPTIONS				
				DIN 5462 ISO 7653 (EN)	DIN 5463 UNI (UNI)	DIN 9611 AGRICULTURAL (DA)	SAE B 4 BOLTS (B4)	SAE B 2 BOLTS (B2)
38 (2.3)	280 (4000)	500	2800	B34T38	B33T38	B34T38DA	B3B4T38	B3B2T38
52 (3.2)	280 (4000)	500	2500	B34T52	B33T52	B34T52DA	B3B4T52	B3B2T52
61 (3.7)	260 (3800)	500	2000	B34T61	B33T61	B34T61DA	B3B4T61	B3B2T61
70 (4.3)	250 (3600)	500	2000	B34T70	B33T70	B34T70DA	B3B4T70	B3B2T70
82 (5.0)	250 (3600)	500	1800	B34T82	B33T82	B34T82DA	B3B4T82	B2B2T82
91 (5.6)	250 (3600)	500	1800	B34T90	B33T90	B34T90DA	B3B4T90	B3B2T90
102 (6.2)	250 (3600)	500	1800	B34T105	B33T105	B34T105DA	B3B4T105	B3B2T105
116 (7.1)	250 (3600)	500	1800	B34T115	B33T115	B34T115DA	B3B4T115	B3B2T115
125 (7.6)	240 (3500)	500	1800	B34T125	B33T125	B34T125DA	B3B4T125	B3B2T125
150 (9.2)	210 (3000)	500	1600	B34T150	B33T150	B34T150DA	B3B4T150	B3B2T150

To order the UNI-DIRECCIONAL version, you must add "U" to the pump Ref.
Example:
B34TU82

To order the SIDE and REAR INLET/OUTLET version, you must replace "T" for "GT in the pump Ref.
Example:
B34GT82

B3G SERIES

BI-DIRECTIONAL

SIDE INLET/OUTLET

DISPLACEMENT cc/rot (in³/rot)	MAXIMUM OPERATING PRESSURE bar (psi)	MINIMUM CONTINUOUS ROTATION rpm	MAXIMUM CONTINUOUS ROTATION rpm	FLANGE AND AXLE OPTIONS				
				DIN 5462 ISO 7653 (EN)	DIN 5463 UNI (UNI)	DIN 9611 AGRICULTURAL (DA)	SAE B 4 BOLTS (B4)	SAE B 2 BOLTS (B2)
38 (2.3)	280 (4000)	500	2800	B34G38	B33G38	B34G38DA	B3B4G38	B3B2G38
52 (3.2)	280 (4000)	500	2500	B34G52	B33G52	B34G52DA	B3B4G52	B3B2G52
61 (3.7)	260 (3800)	500	2000	B34G61	B33G61	B34G61DA	B3B4G61	B3B2G61
70 (4.3)	250 (3600)	500	2000	B34G70	B33G70	B34G70DA	B3B4G70	B3B2G70
82 (5.0)	250 (3600)	500	1800	B34G82	B33G82	B34G82DA	B3B4G82	B3B2G82
91 (5.6)	250 (3600)	500	1800	B34G90	B33G90	B34G90DA	B3B4G90	B3B2G90
102 (6.2)	250 (3600)	500	1800	B34G105	B33G105	B34G105DA	B3B4G105	B3B2G105
116 (7.1)	250 (3600)	500	1800	B34G115	B33G115	B34G115DA	B3B4G115	B3B2G115
125 (7.6)	240 (3500)	500	1800	B34G125	B33G125	B34G125DA	B3B4G125	B3B2G125
150 (9.2)	210 (3000)	500	1600	B34G150	B33G150	B34G150DA	B3B4G150	B3B2G150

ABER is constantly engaged in improving its products and, therefore, reserves itself the right to modify without any further notice the characteristics shown.

HYDRAULIC GEAR PUMPS WITH INTEGRATED VALVE
PV SERIES

82 cc/rot (5.0 in³/rot) to
102 cc/rot (6.2 in³/rot)

Sensitive Integrated Valve

Gear Pump with Sensitive Integrated Valve.

- EXTRA SENSITIVE VALVE
- QUICK RELIEF
- EFFICIENT CYLINDER PROTECTION
- EASY TO APPLY
- FAST TO MOUNT

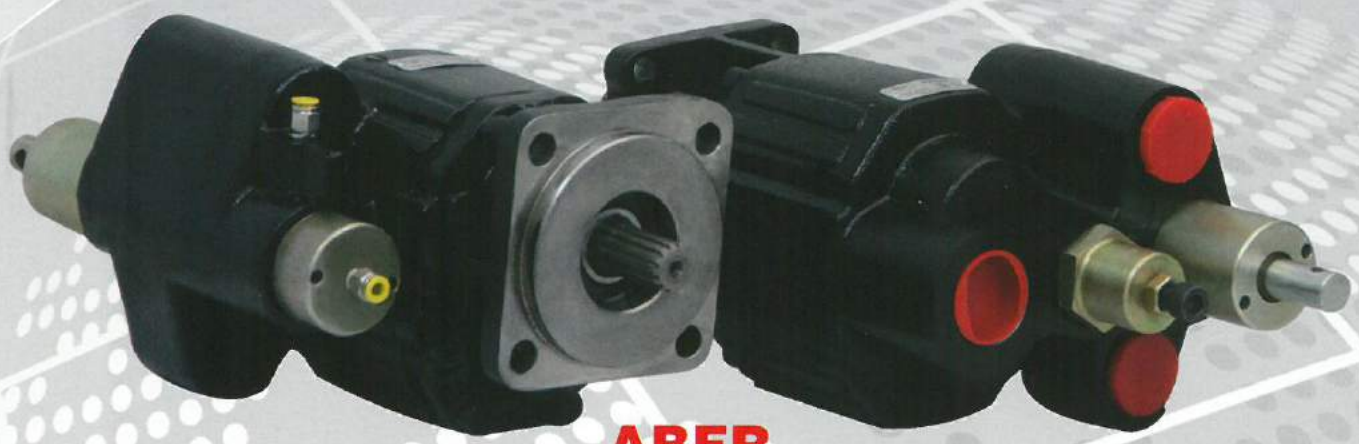

ABER PATENT

DISPLACEMENT cc/rot (in³/rot)	MAXIMUM OPERATING PRESSURE bar (psi)	MINIMUM CONTINUOUS ROTATION rpm	MAXIMUM CONTINUOUS ROTATION rpm	FLANGE AND AXLE OPTIONS		
				DIN 5462 ISO 7653 (EN)	SAE B 4 BOLTS (B4)	SAE B 2 BOLTS (B2)
BSP THREADS						
82 (5.0)	250 (3600)	500	2000	PV4S82P	PVB4S82P	PVB2S82P
102 (6.2)	250 (3600)	500	2000	PV4S105P	PVB4S105P	PVB2S105P

DISPLACEMENT in³/rot (gpm at 1000 rpm)	MAXIMUM OPERATING PRESSURE bar (psi)	MINIMUM CONTINUOUS ROTATION rpm	MAXIMUM CONTINUOUS ROTATION rpm	FLANGE AND AXLE OPTIONS	
				SAE B 4 BOLTS (B4)	SAE B 2 BOLTS (B2)
NPTF THREADS					
5.0 (22)	250 (3600)	500	2000	PVB4C22P	PVB2C22P
6.2 (27)	250 (3600)	500	2000	PVB4C27P	PVB2C27P

ABER is constantly engaged in improving its products and, therefore, reserves itself the right to modify, without any further notice the characteristics shown.

HYDRAULIC PUMPS
ADMISSION CONNECTORS

BI SERIES | HYDRAULIC BENT AXIS PISTON PUMPS

REFERENCE	PUMP DISPLACEMENT (cc/rot)	DESCRIPTION
AD100114	26 ; 32 ; 42	Admission Connector 1" Pipe 1" 1/4 Straight (Steel)
AD100112	26 ; 32 ; 42 ; 50 ; 60	Admission Connector 1" Pipe 1" 1/2 Straight (Steel)
AD100200	50 ; 60	Admission Connector 1" Pipe 2" Straight (Steel)
AD114200	80 ; 81	Admission Connector 1"1/4 Pipe 2" Straight (Steel)
AD112134	108 ; 126 ; 136	Admission Connector 1" 1/2 Pipe 1" 3/4 Straight (Steel)
AD112200	108 ; 126 ; 136	Admission Connector 1" 1/2 Pipe 2" Straight (Steel)
AD200200	142 ; 156 ; 172	Admission Connector 2" Pipe 2" Straight (Steel)
AD200212	142 ; 156 ; 172	Admission Connector 2" Pipe 2" 1/2 Straight (Steel)
A45100114	26 ; 32 ; 42	Admission Connector 1" Pipe 1" 1/4 Elbow 45° (Brass)
A45100112	26 ; 32 ; 42 ; 50 ; 60	Admission Connector 1" Pipe 1" 1/2 Elbow 45° (Brass)
A45100200	50 ; 60	Admission Connector 1" Pipe 2" Elbow 45° (Brass)
A45114200	80 ; 81	Admission Connector 1" 1/4 Pipe 2" Elbow 45° (Brass)
A45112200	108 ; 126 ; 136	Admission Connector 1" 1/2 Pipe 2" Elbow 45° (Brass)
A45200200	142 ; 156 ; 172	Admission Connector 2" Pipe 2" Elbow 45° (Brass)
A90100114	26 ; 32 ; 42	Admission Connector 1" Pipe 1" 1/4 Elbow 90° (Brass)
A90100112	26 ; 32 ; 42 ; 50 ; 60	Admission Connector 1" Pipe 1" 1/2 Elbow 90° (Brass)
A90100134	50 ; 60	Admission Connector 1" Pipe 1" 3/4 Elbow 90° (Brass)
A90100200	50 ; 60	Admission Connector 1" Pipe 2" Elbow 90° (Brass)
A90114134	80 ; 81	Admission Connector 1" 1/4 Pipe 1" 3/4 Elbow 90° (Brass)
A80114200	80 ; 81	Admission Connector 1" 1/4 Pipe 2" Elbow 90° (Brass)
A90112200	108 ; 126 ; 136	Admission Connector 1" 1/2 Pipe 2" Elbow 90° (Brass)
A90200200	142 ; 156 ; 172	Admission Connector 2" Pipe 2" Elbow 90° (Brass)

BH SERIES | HYDRAULIC STRAIGHT PISTON PUMPS

REFERENCE	PUMP DISPLACEMENT (cc/rot)	DESCRIPTION
AD114114	14 ; 19 ; 25 ; 32	Admission Connector 1" 1/4 Pipe 1"1/4 Straight (Steel)
AD114112	14 ; 19 ; 25 ; 32 ; 40 ; 45 ; 50 ; 60[1]	Admission Connector 1" 1/4 Pipe 1"1/2 Straight (Steel)
AD114134	60[1]	Admission Connector 1" 1/4 Pipe 1" 3/4 Straight (Steel)
AD114200	60[1]	Admission Connector 1" 1/4 Pipe 2" Straight (Steel)
AD112112	52 ; 60[2]	Admission Connector 1" 1/2 Pipe 1" 1/2 Straight (Steel)
AD112134	52 ; 60[2]	Admission Connector 1" 1/2 Pipe 1" 3/4 Straight (Steel)
AD112200	52 ; 60[2] ; 70 ; 80[1] ; 86 ; 110	Admission Connector 1" 1/2 Pipe 2" Straight (Steel)
AD200200	80[2] ; 86 ; 110	Admission Connector 2" Pipe 2" Straight (Steel)
A45114112	14 ; 19 ; 25 ; 32 ; 40 ; 45 ; 50 ; 60[1]	Admission Connector 1" 1/4 Pipe 2" Elbow 45° (Brass)
A45114200	60[1]	Admission Connector 1" 1/4 Pipe 2" Elbow 45° (Brass)
A45112112	52 ; 60[2]	Admission Connector 1" 1/2 Pipe 1" 1/2 Elbow 45° (Brass)
A90114114	14 ; 19 ; 25 ; 32	Admission Connector 1" 1/4 Pipe 1"1/4 Elbow 90° (Brass)
A90114112	14 ; 19 ; 25 ; 32 ; 40 ; 45 ; 50 ; 60[1]	Admission Connector 1" 1/4 Pipe 1"1/2 Elbow 90° (Brass)
A90114134	60[1]	Admission Connector 1" 1/4 Pipe 1" 3/4 Elbow 90° (Brass)
A90112112	52 ; 60[2]	Admission Connector 1" 1/2 Pipe 1" 1/2 Elbow 90° (Brass)
A90112200	52 ; 60[2] ; 70 ; 80[1] ; 86 ; 110	Admission Connector 1" 1/2 Pipe 2" Elbow 90° (Brass)
A90200200	80[2] ; 86 ; 110	Admission Connector 2" Pipe 2" Elbow 90° (Brass)

[1] Except for BHV pumps
[2] Only for BHV pumps

Note: 1cc/rot = 0.061 in³/rot

ABER is constantly engaged in improving its products and, therefore, reserves itself the right to modify without any further notice the characteristics shown.

BHD SERIES | HYDRAULIC STRAIGHT PISTON PUMPS WITH TWO OUTLETS

REFERENCE	PUMP DISPLACEMENT (cc/rot)	DESCRIPTION
AD114112	20+20 ; 25+25 ; 30+30	Admission Connector 1" 1/4 Pipe 1" 1/2 Straight (Steel)
AD114134	30+30	Admission Connector 1" 1/4 Pipe 1" 3/4 Straight (Steel)
AD114200	30+30	Admission Connector 1" 1/4 Pipe 2" Straight (Steel)
AD200200	45+45 ; 50+50 ; 53+53 ; 72+38 ; 80+27; 83+42	Admission Connector 2" Pipe 2" Straight (Steel)
AD200212	45+45 ; 50+50 ; 53+53 ; 72+38 ; 80+27; 83+42	Admission Connector 2" Pipe 2" 1/2 Straight (Steel)
A45114112	20+20 ; 25+25 ; 30+30	Admission Connector 1" 1/4 Pipe 2" Elbow 45° (Brass)
A45114200	30+30	Admission Connector 1" 1/4 Pipe 2" Elbow 45° (Brass)
A9014112	20+20 ; 25+25 ; 30+30	Admission Connector 1" 1/4 Pipe 1" 1/2 Elbow 90° (Brass)
A90114134	30+30	Admission Connector 1" 1/4 Pipe 1" 3/4 Elbow 90° (Brass)
A90200200	40+40 ; 45+45 ; 50+50 ; 60+30 ; 72+38 ; 80+27	Admission Connector 2" Pipe 2" Elbow 90° (Brass)

BID SERIES | HYDRAULIC BENT AXIS PISTON PUMPS WITH TWO OUTLETS

REFERENCE	PUMP DISPLACEMENT (cc/rot)	DESCRIPTION
A45112200	38+37 ; 57+28	Admission Connector 1" 1/2 Pipe 2" Elbow 45° (Brass)
A45112300	80+38 ; 58+60 ; 70+66	Admission Connector 1" 1/2 Pipe 3" Elbow 45° (Brass)
A90112200	38+37 ; 57+28	Admission Connector 1" 1/2 Pipe 2" Elbow 90° (Brass)

B2 SERIES | HYDRAULIC GEAR PUMPS

REFERENCE	PUMP DISPLACEMENT (cc/rot)	DESCRIPTION
AD034100	12 ; 16 ; 20 ; 26	Admission Connector 3/4" Pipe 1" Straight (Steel)
AD034114	12 ; 16 ; 20 ; 26 ; 32 ; 39 ; 50	Admission Connector 3/4" Pipe 1" 1/4 Straight (Steel)
AD034112	32 ; 39 ; 50	Admission Connector 3/4" Pipe 1" 1/2 Straight (Steel)
A45034112	12 ; 16 ; 20 ; 26 ; 32 ; 39 ; 50	Admission Connector 3/4" Pipe 1" 1/2 Elbow 45° (Brass)
A90034114	12 ; 16 ; 20 ; 26 ; 32 ; 39 ; 50	Admission Connector 3/4" Pipe 1" 1/4 Elbow 90° (Brass)
A90034112	32 ; 39 ; 50	Admission Connector 3/4" Pipe 1" 1/2 Elbow 90° (Brass)

B3 SERIES | B3R SERIES | B3D SERIES | HYDRAULIC GEAR PUMPS

REFERENCE	PUMP DISPLACEMENT (cc/rot)	DESCRIPTION
AD034112	38	Admission Connector 3/4" Pipe 1" 1/2 Straight (Steel)
AD100112	52 ; 61	Admission Connector 1" Pipe 1" 1/2 Straight (Steel)
AD100200	52 ; 61	Admission Connector 1" Pipe 2" Straight (Steel)
AD114200	82 ; 102 ; 116 ; 125 ; 150	Admission Connector 1" 1/4 Pipe 2" Straight (Steel)
A45034112	38	Admission Connector 3/4" Pipe 1" 1/2 Elbow 45° (Brass)
A45100112	52 ; 61	Admission Connector 1" Pipe 1" 1/2 Elbow 45° (Brass)
A45114200	82 ; 102 ; 116 ; 125 ; 150	Admission Connector 1" 1/4 Pipe 2" Elbow 45° (Brass)
A90034112	38	Admission Connector 3/4" Pipe 1" 1/2 Elbow 90° (Brass)
A90100100	52 ; 61	Admission Connector 1" Pipe 1" Elbow 90° (Brass)
A90100112	52 ; 61	Admission Connector 1" Pipe 1" 1/2 Elbow 90° (Brass)
A90100134	52 ; 61	Admission Connector 1" Pipe 1" 3/4 Elbow 90° (Brass)
A90114134	82	Admission Connector 1" 1/4 Pipe 1" 3/4 Elbow 90° (Brass)
A90114200	82 ; 102 ; 116 ; 125 ; 150	Admission Connector 1" 1/4 Pipe 2" Elbow 90° (Brass)

PVSERIES | HYDRAULIC GEAR PUMPS WITH INTEGRATED VALVE

REFERENCE	PUMP DISPLACEMENT (cc/rot)	DESCRIPTION
AD114200	82 ; 102	Admission Connector 1" 1/4 Pipe 2" Straight (Steel)
A45114200	82 ; 102	Admission Connector 1" 1/4 Pipe 2" Elbow 45° (Brass)
A90114134	82 ; 102	Admission Connector 1" 1/4 Pipe 1" 3/4 Elbow 90° (Brass)
A90114200	82 ; 102	Admission Connector 1" 1/4 Pipe 2" Elbow 90° (Brass)

ABER is constantly engaged in improving its products and, therefore, reserves itself the right to modify without any further notice the characteristics shown.

HYDRAULIC PUMPS
ACCESSORIES

CARDAN FLANGE – DIN 5462 SPLINE BORE

REFERENCE	DESCRIPTION
F1100	Cardan Flange SAE 1100 to DIN 5462 spline bore (A8x32x36)
F1300	Cardan Flange SAE 1300 to DIN 5462 spline bore (A8x32x36)
F1400	Cardan Flange SAE 1400 to DIN 5462 spline bore (A8x32x36)
FD100	Cardan Flange DIN 100 to DIN 5462 spline bore (A8x32x36)

Note: Cardan Flange SAE to DIN 5463 spline bore also available

CARDAN FLANGE – DIN 5462 SPLINE SHAFT

REFERENCE	DESCRIPTION
FM1100	Cardan Flange SAE 1100 to DIN 5462 spline shaft (B8x32x36)
FM1300	Cardan Flange SAE 1300 to DIN 5462 spline shaft (B8x32x36)
FM1400	Cardan Flange SAE 1400 to DIN 5462 spline shaft (B8x32x36)
FMD100	Cardan Flange DIN 100 to DIN 5462 spline shaft (B8x32x36)

CARDAN FLANGE – ADJUSTABLE KEY HUB

REFERENCE	DESCRIPTION
FA1100	Cardan Flange SAE 1100 to Adjustable Key Hub
FA1300	Cardan Flange SAE 1300 to Adjustable Key Hub
FA1400	Cardan Flange SAE 1400 to Adjustable Key Hub
FAD100	Cardan Flange DIN 100 to Adjustable Key Hub

CARDAN FLANGE TO SOLDER

REFERENCE	DESCRIPTION
FS1100	Cardan Flange SAE 1100 to 25 mm shaft diameter to solder
FS1300	Cardan Flange SAE 1300 to 25 mm shaft diameter to solder
FS1400	Cardan Flange SAE 1400 to 25 mm shaft diameter to solder
FSD100	Cardan Flange DIN 100 to 25 mm shaft diameter to solder

CARDAN FLANGE – DIN 9611 SPLINE BORE

REFERENCE	DESCRIPTION
FG1100	Cardan Flange SAE 1100 to DIN 9611 spline bore (SAE 1" 3/8)
FG1300	Cardan Flange SAE 1300 to DIN 9611 spline bore (SAE 1" 3/8)
FG1400	Cardan Flange SAE 1400 to DIN 9611 spline bore (SAE 1" 3/8)
FGD100	Cardan Flange DIN 100 to DIN 9611 spline bore (SAE 1" 3/8)

ISO (4 BOLTS) PTO – OUTPUT SHAFT ADAPTER

REFERENCE	DESCRIPTION
ADA1100R	ISO (4 Bolts) PTO to output shaft SAE 1100 adapter, with two bearings
ADA1300R	ISO (4 Bolts) PTO to output shaft SAE 1300 adapter, with two bearings
ADA1400R	ISO (4 Bolts) PTO to output shaft SAE 1400 adapter, with two bearings
ADAD100R	ISO (4 Bolts) PTO to output shaft DIN 100 adapter, with two bearings
ADA1100	ISO (4 Bolts) PTO to output shaft SAE 1100 adapter, with one bearing
ADA1300	ISO (4 Bolts) PTO to output shaft SAE 1300 adapter, with one bearing
ADA1400	ISO (4 Bolts) PTO to output shaft SAE 1400 adapter, with one bearing
ADAD100	ISO (4 Bolts) PTO to output shaft DIN 100 adapter, with one bearing

ISO-UNI / UNI-ISO / ISO-ISO ADAPTER

REFERENCE	DESCRIPTION
ADA3F4F	(to all PTO's) UNI (3 Bolts) to ISO (4 Bolts) adapter
ADA4F3F	(to all PTO's) ISO (4 Bolts) to UNI (3 Bolts) adapter
ADA4F3FC	(to low torque PTO's) ISO (4 Bolts) to UNI (3 Bolts), short adapter
ADAUNIISO	UNI (3 Bolts) to ISO 3019-2 (4 Bolts) adapter
ADA4F4F1RE	ISO (4 Bolts) Male-Female adapter, with one ball bearing + retainer seal
ADA4F4F2RC	ISO (4 Bolts) Male-Female adapter, with two tapered roller bearings
ADA4F4F2RE	ISO (4 Bolts) Male-Female adapter, with two ball bearings

ABER is constantly engaged in improving its products and, therefore, reserves itself the right to modify without any further notice the characteristics shown.

HYDRAULIC MOTORS
MBI SERIES | BENT AXIS PISTON MOTORS

26 cc/rot (1.6 in³/rot) to 172 cc/rot (10.5 in³/rot)

Efficiency and Robutness

MBI Series allow a change in the rotation way in an easy and safe way for all the motor components.

When at work these motors show a good performance, with very low noise.

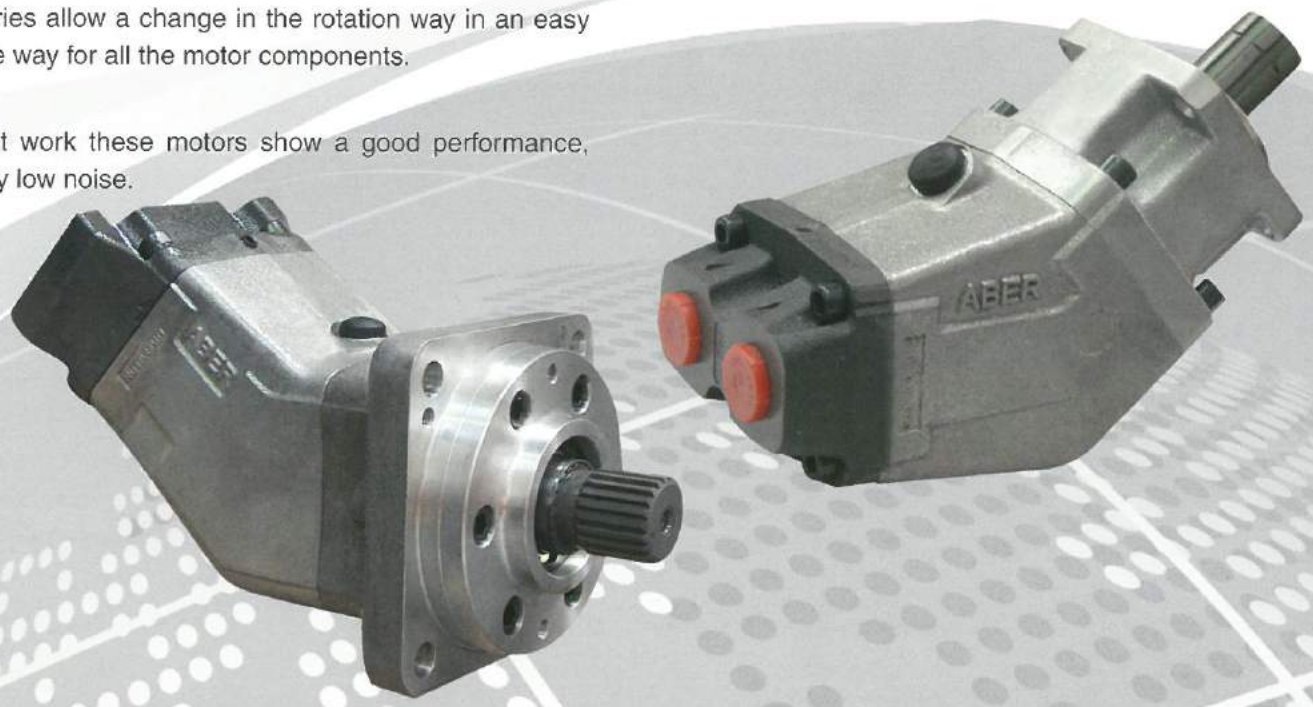

DISPLACEMENT cc/rot (in³/rot)	MAXIMUM CONTINUOUS ROTATION rpm	FLANGE AND AXLE OPTIONS						
		DIN 5462 ISO 7653 (EN)	DIN 9611 AGRICULTURAL (DA)	DIN 9611 INTERIOR (DI)	DIN 5482 MULTIPLIER (DM)	DIN 5480 ISO 3019-2 (IA1)	SAE* 4 BOLTS (B4/C4)	SAE* 2 BOLTS (B2/C2)
UP TO 350 bar (5000 psi)								
26 (1.6)	3200	MBI25M	MBI25MDA	-	MBI25MDM	-	MBI25M5B4	MBI25M5B2
32 (2.0)	3200	MBI30M	MBI30MDA	-	MBI30MDM	-	MBI30M5B4	MBI30M5B2
42 (2.6)	2800	MBI40M	MBI40MDA	-	MBI40MDM	-	MBI40M5B4	MBI40M5B2
50 (3.1)	2400	MBI50M	MBI50MDA	-	MBI50MDM	MBI50M5IA1	MBI50M5B4	MBI50M5B2
60 (3.7)	2400	MBI60M7	MBI60M7DA	-	MBI60M7DM	MBI60M7IA1	MBI60M7B4	MBI60M7B2
80 (4.9)	2400	MBI80P7	MBI80P7DA	MBI80P7DI	-	MBI80P7IA1	MBI80P7C4	MBI80P7C2
108 (6.6)	2250	MBI110P7	MBI110P7DA	MBI110P7DI	-	MBI110P7IA1	MBI110P7C4	MBI110P7C2
142 (8.7)	2400	MBI140H9	MBI140H9DA	MBI140H9DI	-	MBI140H9IA1	MBI140H9C4	MBI140H9C2
156 (9.5)	2400	MBI160H9	MBI160H9DA	MBI160H9DI	-	MB160H9IA1	MBI160H9C4	MBI160H9C2
UP TO 300 bar (4300 psi)								
81 (4.9)	2200	MBI80M7	MBI80M7DA	-	MBI80M7DM	MBI80M7IA1	MBI80M7B4	MBI80M7B2
126 (7.7)	2000	MBI125P7	MBI125P7DA	MBI125P7DI	-	-	MBI125P7C4	MBI125P7C2
172 (10.5)	2400	MBI170H9	MBI170H9DA	-	-	-	MBI170H9C4	MBI170H9C2
UP TO 250 bar (3600 psi)								
136 (8.3)	2000	MBI135P7	MBI135P7DA	MBI135P7DI	-	-	MBI135P7C4	MBI135P7C2

* TO ORDER THE MOTOR WITH THE SAE FLANGE AND THE KEY SHAFT, YOU MUST ADD "K" TO THE MOTOR REF.
Example:
MBI30M5B4K

ABER is constantly engaged in improving its products and therefore, reserves itself the right to modify without any further notice the characteristics shown.

HYDRAULIC PUMPS
ACCESSORIES

CARDAN FLANGE – DIN 5462 SPLINE BORE

REFERENCE	DESCRIPTION
F1100	Cardan Flange SAE 1100 to DIN 5462 spline bore (A8x32x36)
F1300	Cardan Flange SAE 1300 to DIN 5462 spline bore (A8x32x36)
F1400	Cardan Flange SAE 1400 to DIN 5462 spline bore (A8x32x36)
FD100	Cardan Flange DIN 100 to DIN 5462 spline bore (A8x32x36)

Note: Cardan Flange SAE to DIN 5463 spline bore also available

CARDAN FLANGE – DIN 5462 SPLINE SHAFT

REFERENCE	DESCRIPTION
FM1100	Cardan Flange SAE 1100 to DIN 5462 spline shaft (B8x32x36)
FM1300	Cardan Flange SAE 1300 to DIN 5462 spline shaft (B8x32x36)
FM1400	Cardan Flange SAE 1400 to DIN 5462 spline shaft (B8x32x36)
FMD100	Cardan Flange DIN 100 to DIN 5462 spline shaft (B8x32x36)

CARDAN FLANGE – ADJUSTABLE KEY HUB

REFERENCE	DESCRIPTION
FA1100	Cardan Flange SAE 1100 to Adjustable Key Hub
FA1300	Cardan Flange SAE 1300 to Adjustable Key Hub
FA1400	Cardan Flange SAE 1400 to Adjustable Key Hub
FAD100	Cardan Flange DIN 100 to Adjustable Key Hub

CARDAN FLANGE TO SOLDER

REFERENCE	DESCRIPTION
FS1100	Cardan Flange SAE 1100 to 25 mm shaft diameter to solder
FS1300	Cardan Flange SAE 1300 to 25 mm shaft diameter to solder
FS1400	Cardan Flange SAE 1400 to 25 mm shaft diameter to solder
FSD100	Cardan Flange DIN 100 to 25 mm shaft diameter to solder

CARDAN FLANGE – DIN 9611 SPLINE BORE

REFERENCE	DESCRIPTION
FG1100	Cardan Flange SAE 1100 to DIN 9611 spline bore (SAE 1" 3/8)
FG1300	Cardan Flange SAE 1300 to DIN 9611 spline bore (SAE 1" 3/8)
FG1400	Cardan Flange SAE 1400 to DIN 9611 spline bore (SAE 1" 3/8)
FGD100	Cardan Flange DIN 100 to DIN 9611 spline bore (SAE 1" 3/8)

ISO (4 BOLTS) PTO – OUTPUT SHAFT ADAPTER

REFERENCE	DESCRIPTION
ADA1100R	ISO (4 Bolts) PTO to output shaft SAE 1100 adapter, with two bearings
ADA1300R	ISO (4 Bolts) PTO to output shaft SAE 1300 adapter, with two bearings
ADA1400R	ISO (4 Bolts) PTO to output shaft SAE 1400 adapter, with two bearings
ADAD100R	ISO (4 Bolts) PTO to output shaft DIN 100 adapter, with two bearings
ADA1100	ISO (4 Bolts) PTO to output shaft SAE 1100 adapter, with one bearing
ADA1300	ISO (4 Bolts) PTO to output shaft SAE 1300 adapter, with one bearing
ADA1400	ISO (4 Bolts) PTO to output shaft SAE 1400 adapter, with one bearing
ADAD100	ISO (4 Bolts) PTO to output shaft DIN 100 adapter, with one bearing

ISO-UNI / UNI-ISO / ISO-ISO ADAPTER

REFERENCE	DESCRIPTION
ADA3F4F	(to all PTO's) UNI (3 Bolts) to ISO (4 Bolts) adapter
ADA4F3F	(to all PTO's) ISO (4 Bolts) to UNI (3 Bolts) adapter
ADA4F3FC	(to low torque PTO's) ISO (4 Bolts) to UNI (3 Bolts), short adapter
ADAUNIISO	UNI (3 Bolts) to ISO 3019-2 (4 Bolts) adapter
ADA4F4F1RE	ISO (4 Bolts) Male-Female adapter, with one ball bearing + retainer seal
ADA4F4F2RC	ISO (4 Bolts) Male-Female adapter, with two tapered roller bearings
ADA4F4F2RE	ISO (4 Bolts) Male-Female adapter, with two ball bearings

ABER is constantly engaged in improving its products and, therefore, reserves itself the right to modify without any further notice the characteristics shown.

HYDRAULIC PUMPS
ACCESSORIES

CARDAN FLANGE – DIN 5462 SPLINE BORE

REFERENCE	DESCRIPTION
F1100	Cardan Flange SAE 1100 to DIN 5462 spline bore (A8x32x36)
F1300	Cardan Flange SAE 1300 to DIN 5462 spline bore (A8x32x36)
F1400	Cardan Flange SAE 1400 to DIN 5462 spline bore (A8x32x36)
FD100	Cardan Flange DIN 100 to DIN 5462 spline bore (A8x32x36)

Note: Cardan Flange SAE to DIN 5463 spline bore also available

CARDAN FLANGE – DIN 5462 SPLINE SHAFT

REFERENCE	DESCRIPTION
FM1100	Cardan Flange SAE 1100 to DIN 5462 spline shaft (B8x32x36)
FM1300	Cardan Flange SAE 1300 to DIN 5462 spline shaft (B8x32x36)
FM1400	Cardan Flange SAE 1400 to DIN 5462 spline shaft (B8x32x36)
FMD100	Cardan Flange DIN 100 to DIN 5462 spline shaft (B8x32x36)

CARDAN FLANGE – ADJUSTABLE KEY HUB

REFERENCE	DESCRIPTION
FA1100	Cardan Flange SAE 1100 to Adjustable Key Hub
FA1300	Cardan Flange SAE 1300 to Adjustable Key Hub
FA1400	Cardan Flange SAE 1400 to Adjustable Key Hub
FAD100	Cardan Flange DIN 100 to Adjustable Key Hub

CARDAN FLANGE TO SOLDER

REFERENCE	DESCRIPTION
FS1100	Cardan Flange SAE 1100 to 25 mm shaft diameter to solder
FS1300	Cardan Flange SAE 1300 to 25 mm shaft diameter to solder
FS1400	Cardan Flange SAE 1400 to 25 mm shaft diameter to solder
FSD100	Cardan Flange DIN 100 to 25 mm shaft diameter to solder

CARDAN FLANGE – DIN 9611 SPLINE BORE

REFERENCE	DESCRIPTION
FG1100	Cardan Flange SAE 1100 to DIN 9611 spline bore (SAE 1" 3/8)
FG1300	Cardan Flange SAE 1300 to DIN 9611 spline bore (SAE 1" 3/8)
FG1400	Cardan Flange SAE 1400 to DIN 9611 spline bore (SAE 1" 3/8)
FGD100	Cardan Flange DIN 100 to DIN 9611 spline bore (SAE 1" 3/8)

ISO (4 BOLTS) PTO – OUTPUT SHAFT ADAPTER

REFERENCE	DESCRIPTION
ADA1100R	ISO (4 Bolts) PTO to output shaft SAE 1100 adapter, with two bearings
ADA1300R	ISO (4 Bolts) PTO to output shaft SAE 1300 adapter, with two bearings
ADA1400R	ISO (4 Bolts) PTO to output shaft SAE 1400 adapter, with two bearings
ADAD100R	ISO (4 Bolts) PTO to output shaft DIN 100 adapter, with two bearings
ADA1100	ISO (4 Bolts) PTO to output shaft SAE 1100 adapter, with one bearing
ADA1300	ISO (4 Bolts) PTO to output shaft SAE 1300 adapter, with one bearing
ADA1400	ISO (4 Bolts) PTO to output shaft SAE 1400 adapter, with one bearing
ADAD100	ISO (4 Bolts) PTO to output shaft DIN 100 adapter, with one bearing

ISO-UNI / UNI-ISO / ISO-ISO ADAPTER

REFERENCE	DESCRIPTION
ADA3F4F	(to all PTO's) UNI (3 Bolts) to ISO (4 Bolts) adapter
ADA4F3F	(to all PTO's) ISO (4 Bolts) to UNI (3 Bolts) adapter
ADA4F3FC	(to low torque PTO's) ISO (4 Bolts) to UNI (3 Bolts), short adapter
ADAUNIISO	UNI (3 Bolts) to ISO 3019-2 (4 Bolts) adapter
ADA4F4F1RE	ISO (4 Bolts) Male-Female adapter, with one ball bearing + retainer seal
ADA4F4F2RC	ISO (4 Bolts) Male-Female adapter, with two tapered roller bearings
ADA4F4F2RE	ISO (4 Bolts) Male-Female adapter, with two ball bearings

ABER is constantly engaged in improving its products and, therefore, reserves itself the right to modify without any further notice the characteristics shown.

HYDRAULIC MOTORS
MBI SERIES | BENT AXIS PISTON MOTORS

26 cc/rot (1.6 in³/rot) to 172 cc/rot (10.5 in³/rot)

Efficiency and Robutness

MBI Series allow a change in the rotation way in an easy and safe way for all the motor components.

When at work these motors show a good performance, with very low noise.

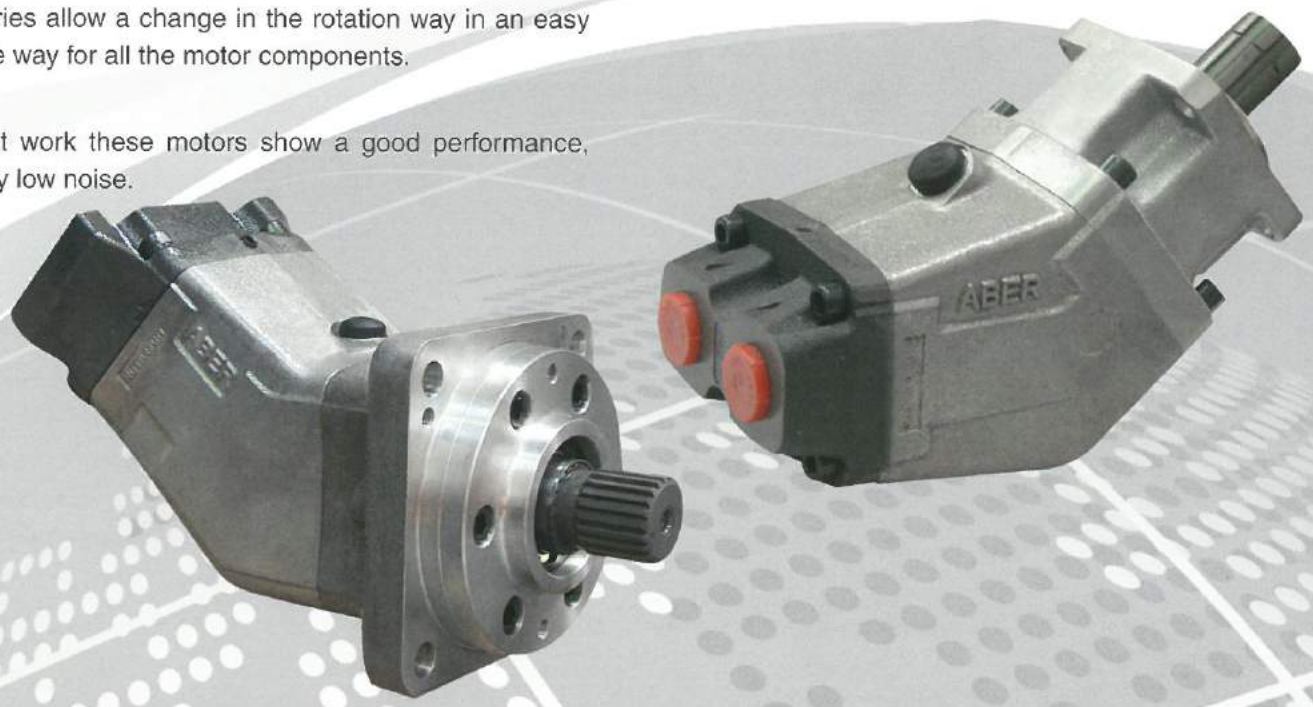

DISPLACEMENT cc/rot (in³/rot)	MAXIMUM CONTINUOUS ROTATION rpm	FLANGE AND AXLE OPTIONS						
		DIN 5462 ISO 7653 (EN)	DIN 9611 AGRICULTURAL (DA)	DIN 9611 INTERIOR (DI)	DIN 5482 MULTIPLIER (DM)	DIN 5480 ISO 3019-2 (IA1)	SAE* 4 BOLTS (B4/C4)	SAE* 2 BOLTS (B2/C2)
UP TO 350 bar (5000 psi)								
26 (1.6)	3200	MBI25M	MBI25MDA	-	MBI25MDM	-	MBI25M5B4	MBI25M5B2
32 (2.0)	3200	MBI30M	MBI30MDA	-	MBI30MDM	-	MBI30M5B4	MBI30M5B2
42 (2.6)	2800	MBI40M	MBI40MDA	-	MBI40MDM	-	MBI40M5B4	MBI40M5B2
50 (3.1)	2400	MBI50M	MBI50MDA	-	MBI50MDM	MBI50M5IA1	MBI50M5B4	MBI50M5B2
60 (3.7)	2400	MBI60M7	MBI60M7DA	-	MBI60M7DM	MBI60M7IA1	MBI60M7B4	MBI60M7B2
80 (4.9)	2400	MBI80P7	MBI80P7DA	MBI80P7DI	-	MBI80P7IA1	MBI80P7C4	MBI80P7C2
108 (6.6)	2250	MBI110P7	MBI110P7DA	MBI110P7DI	-	MBI110P7IA1	MBI110P7C4	MBI110P7C2
142 (8.7)	2400	MBI140H9	MBI140H9DA	MBI140H9DI	-	MBI140H9IA1	MBI140H9C4	MBI140H9C2
156 (9.5)	2400	MBI160H9	MBI160H9DA	MBI160H9DI	-	MB160H9IA1	MBI160H9C4	MBI160H9C2
UP TO 300 bar (4300 psi)								
81 (4.9)	2200	MBI80M7	MBI80M7DA	-	MBI80M7DM	MBI80M7IA1	MBI80M7B4	MBI80M7B2
126 (7.7)	2000	MBI125P7	MBI125P7DA	MBI125P7DI	-	-	MBI125P7C4	MBI125P7C2
172 (10.5)	2400	MBI170H9	MBI170H9DA	-	-	-	MBI170H9C4	MBI170H9C2
UP TO 250 bar (3600 psi)								
136 (8.3)	2000	MBI135P7	MBI135P7DA	MBI135P7DI	-	-	MBI135P7C4	MBI135P7C2

* TO ORDER THE MOTOR WITH THE SAE FLANGE AND THE KEY SHAFT, YOU MUST ADD "K" TO THE MOTOR REF.
Example:
MBI30M5B4K

ABER is constantly engaged in improving its products and therefore, reserves itself the right to modify without any further notice the characteristics shown.

HYDRAULIC GEAR MOTORS
MB3 SERIES

38 cc/rot (2.3 in³/rot) to 150 cc/rot (9.2 in³/rot)

Medium, Faster

Gear motors with bi-direccional sence of rotation.

MB3T SERIES

BI-DIRECTIONAL

REAR INLET/OUTLET

DISPLACEMENT cc/rot (in³/rot)	MAXIMUM CONTINUOUS ROTATION rpm	FLANGE AND AXLE OPTIONS				
		DIN 5462 ISO 7653 (EN)	DIN 5463 UNI (UNI)	DIN 9611 AGRICULTURAL (DA)	SAE B 4 BOLTS (B4)	SAE B 2 BOLTS (B2)
38 (2.3)	2400	MB34T38	MB33T38	MB34T38DA	MB3B4T38	MB3B2T38
52 (3.2)	2100	MB34T52	MB33T52	MB34T52DA	MB3B4T52	MB3B2T52
61 (3.7)	1700	MB34T61	MB33T61	MB34T61DA	MB3B4T61	MB3B2T61
70 (4.3)	1700	MB34T70	MB33T70	MB34T70DA	MB3B4T70	MB3B2T70
82 (5.0)	1500	MB34T82	MB33T82	MB34T82DA	MB3B4T82	MB2B2T82
91 (5.6)	1500	MB34T90	MB33T90	MB34T90DA	MB3B4T90	MB3B2T90
102 (6.2)	1500	MB34T105	MB33T105	MB34T105DA	MB3B4T105	MB3B2T105
116 (7.1)	1500	MB34T115	MB33T115	MB34T115DA	MB3B4T115	MB3B2T115
125 (7.6)	1500	MB34T125	MB33T125	MB34T125DA	MB3B4T125	MB3B2T125
150 (9.2)	1300	MB34T150	MB33T150	MB34T150DA	MB3B4T150	MB3B2T150

MB3G SERIES

BI-DIRECTIONAL

SIDE INLET/OUTLET

DISPLACEMENT cc/rot (in³/rot)	MAXIMUM CONTINUOUS ROTATION rpm	FLANGE AND AXLE OPTIONS				
		DIN 5462 ISO 7653 (EN)	DIN 5463 UNI (UNI)	DIN 9611 AGRICULTURAL (DA)	SAE B 4 BOLTS (B4)	SAE B 2 BOLTS (B2)
38 (2.3)	2400	MB34G38	MB33G38	MB34G38DA	MB3B4G38	MB3B2G38
52 (3.2)	2100	MB34G52	MB33G52	MB34G52DA	MB3B4G52	MB3B2G52
61 (3.7)	1700	MB34G61	MB33G61	MB34G61DA	MB3B4G61	MB3B2G61
70 (4.3)	1700	MB34G70	MB33G70	MB34G70DA	MB3B4G70	MB3B2G70
82 (5.0)	1500	MB34G82	MB33G82	MB34G82DA	MB3B4G82	MB3B2G82
91 (5.6)	1500	MB34G90	MB33G90	MB34G90DA	MB3B4G90	MB3B2G90
102 (6.2)	1500	MB34G105	MB33G105	MB34G105DA	MB3B4G105	MB3B2G105
116 (7.1)	1500	MB34G115	MB33G115	MB34G115DA	MB3B4G115	MB3B2G115
125 (7.6)	1500	MB34G125	MB33G125	MB34G125DA	MB3B4G125	MB3B2G125
150 (9.2)	1300	MB34G150	MB33G150	MB34G150DA	MB3B4G150	MB3B2G150

ABER is constantly engaged in improving its products and, therefore, reserves itself the right to modify without any further notice the characteristics shown.

HYDRAULIC VALVES
TIPPING VALVES

REFERENCE	DESCRIPTION
UP TO 300 bar (4300 psi)	
DTCA130	Tipping Valve up to 130 l/min ; Open circuit ; progressive descent
DTCA1302P	Tipping Valve up to 130 l/min ; Open circuit ; progressive descent 2 pressure range
DTCA1303P	Tipping Valve up to 130 l/min ; Open circuit ; progressive descent 3 pressure range
VVLR130	Tipping Valve up to 130 l/min ; Close circuit ; 1 or 2 descent speeds
VVLR1302P	Tipping Valve up to 130 l/min ; Close circuit ; 1 or 2 descent speeds ; 2 pressure range
VVLR1303P	Tipping Valve up to 130 l/min ; Close circuit ; 1 or 2 descent speeds ; 3 pressure range
VVP130	Tipping Valve up to 130 l/min ; Close circuit ; progressive descent
VVLR13001	Tipping Valve up to 130 l/min ; Close circuit ; 1 or 2 descent speeds (1" BSP)
VVLR130F	Tipping Valve up to 130 l/min ; Close circuit ; 1 or 2 descent speeds ; push stroke end
VVP130F	Tipping Valve up to 130 l/min ; Close circuit ; progressive descent ; push stroke end
DTCA130F	Tipping Valve up to 130 l/min ; Open circuit ; progressive descent ; push stroke end
DTCA13001	Tipping Valve up to 130 l/min ; Open circuit ; progressive descent (1" BSP)
DTCA1302V	Tipping Valve up to 130 l/min ; Open circuit ; 2 descent speeds
DTCA250	Tipping Valve up to 250 l/min ; Open circuit ; progressive descent
DTCA2502P	Tipping Valve up to 250 l/min ; Open circuit ; progressive descent ; 2 pressure range
DTCA2503P	Tipping Valve up to 250 l/min ; Open circuit ; progressive descent ; 3 pressure range
DT50C3C0	Tipping Valve up to 50 l/min + cable for mechanical operation 3.0 m
UP TO 200 bar (2900 psi)	
VVP150	Tipping Valve up to 150 l/min ; Close circuit ; progressive descent
DTCA170	Tipping Valve up to 170 l/min ; Open circuit ; progressive descent
DTCA1702P	Tipping Valve up to 170 l/min ; Open circuit ; progressive descent ; 2 pressure range
DTCA1703P	Tipping Valve up to 170 l/min ; Open circuit ; progressive descent ; 3 pressure range
DTCA170F	Tipping Valve up to 170 l/min ; Open circuit ; progressive descent ; push stroke end
DTCA1702V	Tipping Valve up to 170 l/min ; Open circuit ; 2 descent speeds

HYDRAULIC VALVES
HIGH PRESSURE 2 WAYS BALL VALVES

REFERENCE	DESCRIPTION
UP TO 500 bar (7200 psi)	
VD2V38C1	2 Ways Ball Valve up to 35 l/min ; 3/8" BSP
VD2V12C1	2 Ways Ball Valve up to 60 l/min ; 1/2" BSP
UP TO 315 bar (4500 psi)	
VD2V34C1	2 Ways Ball Valve up to 100 l/min ; 3/4" BSP
VD2V10C1	2 Ways Ball Valve up to 150 l/min ; 1" BSP

ABER is constantly engaged in improving its products and, therefore, reserves itself the right to modify without any further notice the characteristics shown.

HYDRAULIC VALVES
TIPPING VALVES

REFERENCE	DESCRIPTION
UP TO 300 bar (4300 psi)	
DTCA130	Tipping Valve up to 130 l/min ; Open circuit ; progressive descent
DTCA1302P	Tipping Valve up to 130 l/min ; Open circuit ; progressive descent 2 pressure range
DTCA1303P	Tipping Valve up to 130 l/min ; Open circuit ; progressive descent 3 pressure range
VVLR130	Tipping Valve up to 130 l/min ; Close circuit ; 1 or 2 descent speeds
VVLR1302P	Tipping Valve up to 130 l/min ; Close circuit ; 1 or 2 descent speeds ; 2 pressure range
VVLR1303P	Tipping Valve up to 130 l/min ; Close circuit ; 1 or 2 descent speeds ; 3 pressure range
VVP130	Tipping Valve up to 130 l/min ; Close circuit ; progressive descent
VVLR13001	Tipping Valve up to 130 l/min ; Close circuit ; 1 or 2 descent speeds (1" BSP)
VVLR130F	Tipping Valve up to 130 l/min ; Close circuit ; 1 or 2 descent speeds ; push stroke end
VVP130F	Tipping Valve up to 130 l/min ; Close circuit ; progressive descent ; push stroke end
DTCA130F	Tipping Valve up to 130 l/min ; Open circuit ; progressive descent ; push stroke end
DTCA13001	Tipping Valve up to 130 l/min ; Open circuit ; progressive descent (1" BSP)
DTCA1302V	Tipping Valve up to 130 l/min ; Open circuit ; 2 descent speeds
DTCA250	Tipping Valve up to 250 l/min ; Open circuit ; progressive descent
DTCA2502P	Tipping Valve up to 250 l/min ; Open circuit ; progressive descent ; 2 pressure range
DTCA2503P	Tipping Valve up to 250 l/min ; Open circuit ; progressive descent ; 3 pressure range
DT50C3C0	Tipping Valve up to 50 l/min + cable for mechanical operation 3.0 m
UP TO 200 bar (2900 psi)	
VVP150	Tipping Valve up to 150 l/min ; Close circuit ; progressive descent
DTCA170	Tipping Valve up to 170 l/min ; Open circuit ; progressive descent
DTCA1702P	Tipping Valve up to 170 l/min ; Open circuit ; progressive descent ; 2 pressure range
DTCA1703P	Tipping Valve up to 170 l/min ; Open circuit ; progressive descent ; 3 pressure range
DTCA170F	Tipping Valve up to 170 l/min ; Open circuit ; progressive descent ; push stroke end
DTCA1702V	Tipping Valve up to 170 l/min ; Open circuit ; 2 descent speeds

HYDRAULIC VALVES
HIGH PRESSURE 2 WAYS BALL VALVES

REFERENCE	DESCRIPTION
UP TO 500 bar (7200 psi)	
VD2V38C1	2 Ways Ball Valve up to 35 l/min ; 3/8" BSP
VD2V12C1	2 Ways Ball Valve up to 60 l/min ; 1/2" BSP
UP TO 315 bar (4500 psi)	
VD2V34C1	2 Ways Ball Valve up to 100 l/min ; 3/4" BSP
VD2V10C1	2 Ways Ball Valve up to 150 l/min ; 1" BSP

ABER is constantly engaged in improving its products and, therefore, reserves itself the right to modify without any further notice the characteristics shown.

HYDRAULIC VALVES
HIGH PRESSURE 3 WAYS BALL VALVES

REFERENCE	DESCRIPTION
UP TO 315 bar (4500 psi)	
VD3V38C1	3 Ways Ball Valve up to 35 l/min ; 3/8" BSP
VD3V12C1	3 Ways Ball Valve up to 60 l/min ; 1/2" BSP
UP TO 250 bar (3600 psi)	
VD3V34C1	3 Ways Ball Valve up to 100 l/min ; 3/4" BSP
VD3V10C1	3 Ways Ball Valve up to 150 l/min ; 1" BSP

HYDRAULIC VALVES
HIGH PRESSURE 3 WAYS FLOW DIVIDER

REFERENCE	DESCRIPTION
UP TO 350 bar (5000 psi)	
DC3V38C1	3 Ways Flow Divider up to 60 l/min ; 3/8" BSP
DC3V12C1	3 Ways Flow Divider up to 90 l/min ; 1/2" BSP
DC3V34C1	3 Ways Flow Divider up to 120 l/min ; 3/4" BSP
DC3V34AP	3 Ways Flow Divider up to 200 l/min ; 3/4" BSP ; Pneumatic Circuit Selector
DC3V10AP	3 Ways Flow Divider up to 200 l/min ; 1" BSP ; Pneumatic Circuit Selector
UP TO 300 bar (4300 psi)	
DC3V10C1	3 Ways Flow Divider up to 200 l/min ; 1" BSP

HYDRAULIC VALVES
PRESSURE RELIEF VALVES

REFERENCE	DESCRIPTION
UP TO 350 bar (5000 psi)	
LP120	Pressure relief valve up to 120 l/min
UP TO 250 bar (3600 psi)	
LP80	Pressure relief valve up to 80 l/min
UP TO 200 bar (2900 psi)	
LP150	Pressure relief valve up to 150 l/min

ABER is constantly engaged in improving its products and, therefore, reserves itself the right to modify without any further notice the characteristics shown.

HYDRAULIC VALVES
BYPASS VALVES

REFERENCE	DESCRIPTION
BP3060L	Bypass Valve to work in pumps from 30cc to 60cc ; Pressures 210/250 bar ; 24 VDC
BP80L	Bypass Valve to work in pumps from 80cc ; Pressures 210/250 bar ; 24 VDC
BP110L	Bypass Valve to work in pumps from 110cc ; Pressures 210/250 bar ; 24 VDC
BP3060H	Bypass Valve to work in pumps from 30cc to 80cc ; Pressures 350/400 bar ; 24 VDC
BP80H	Bypass Valve to work in pumps from 80cc ; Pressures 350/400 bar ; 24 VDC
BP110H	Bypass Valve to work in pumps from 110cc ; Pressures 350/400 bar ; 24 VDC
BPR3060L	Bypass with relief valve to work in pumps from 30cc to 60cc ; Pressures 210/250 bar ; 24 VDC
BPR80L	Bypass with relief valve to work in pumps from 80cc ; Pressures 210/250 bar ; 24 VDC
BPR110L	Bypass with relief valve to work in pumps from 110cc ; Pressures 210/250 bar ; 24 VDC
BPR3060H	Bypass with relief valve to work in pumps from 30cc to 80cc ; Pressures 350/400 bar ; 24 VDC
BPR80H	Bypass with relief valve to work in pumps from 80cc ; Pressures 350/400 bar ; 24 VDC
BPR110H	Bypass with relief valve to work in pumps from 110cc ; Pressures 350/400 bar ; 24 VDC

HYDRAULIC VALVES
END OF STROKES

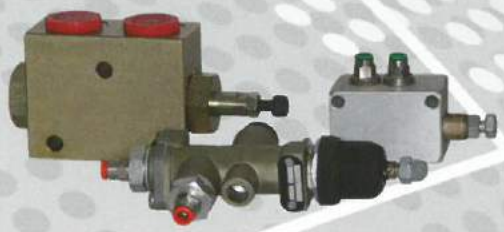

REFERENCE	DESCRIPTION
AOHVFC12	End of Stroke Valve 1/2" BSP
AOHVFC34	End of Stroke Valve 3/4" BSP
VFCNO	Pneumatic End of Stroke Normally Open
SVFCNO	Pneumatic End of Stroke Normally Open + Support
VFCOCCC	Pneumatic End of Stroke Valve, Open/Closed Circuit
TBTFC01	Electric End of Stroke, for three tipper scissor

HYDRAULIC VALVES
BALL VALVES

REFERENCE	DESCRIPTION
CCKH017	Ball Valve 1" BSP ; Female - Female (Brass)
CCKH029	Ball Valve 1" 1/4 BSP ; Male - Female (Brass)
CCKH06	Ball Valve 1" 1/2 BSP ; Male - Female (Brass)

ABER is constantly engaged in improving its products and, therefore, reserves itself the right to modify without any further notice the characteristics shown.

HYDRAULIC VALVES
ELECTRICAL DISTRIBUTORS

REFERENCE	DESCRIPTION
DTE4012	Electrical Distributor 3 ways, 40 l/min ; 12 VDC
DTE4024	Electrical Distributor 3 ways, 40 l/min ; 24 VDC
DTE8012	Electrical Distributor 3 ways, 80 l/min ; 12 VDC
DTE8024	Electrical Distributor 3 ways, 80 l/min ; 24 VDC

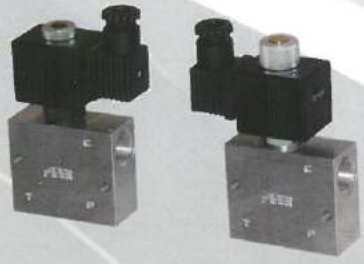

HYDRAULIC VALVES
ELECTROVALVES

REFERENCE	DESCRIPTION
EVNC01	Electrovalve, normally close ; 40 l/min ; 1/2" BSP ; 12 VDC
EVNC02	Electrovalve, normally close ; 40 l/min ; 1/2" BSP ; 24 VDC
EVNO01	Electrovalve, normally open ; 40 l/min ; 1/2" BSP ; 12 VDC
EVNO02	Electrovalve, normally open ; 40 l/min ; 1/2" BSP ; 24 VDC
EVNC03	Electrovalve, normally close ; 40 l/min ; 3/8" BSP ; 12 VDC
EVNC04	Electrovalve, normally close ; 40 l/min ; 3/8" BSP ; 24 VDC
EVNO03	Electrovalve, normally open ; 40 l/min ; 3/8" BSP ; 12 VDC
EVNO04	Electrovalve, normally open ; 40 l/min ; 3/8" BSP ; 24 VDC
EVNCAR01	Electrovalve normally close ; 40 l/min ; 1/2" BSP ; 12 VDC ; with check valve
EVNCAR02	Electrovalve, normally close 40 l/min ; 1/2" BSP ; 24 VDC ; with check valve
EVNOAR01	Electrovalve, normally open ; 40 l/min ; 1/2" BSP ; 12 VDC ; with check valve
EVNOAR02	Electrovalve, normally open ; 40 l/min ; 1/2" BSP ; 24 VDC ; with check valve
EVNCAR03	Electrovalve normally close ; 40 l/min ; 3/8" BSP ; 12 VDC ; with check valve
EVNCAR04	Electrovalve, normally close 40 l/min ; 3/8" BSP ; 24 VDC ; with check valve
EVNOAR03	Electrovalve, normally open ; 40 l/min ; 3/8" BSP ; 12 VDC ; with check valve
EVNOAR04	Electrovalve, normally open ; 40 l/min ; 3/8" BSP ; 24 VDC ; with check valve
EVNC0C1	Electrovalve normally close ; 40 l/min ; 1/2" BSP ; 12 VDC ; with check valve+relief valve
EVNC0C2	Electrovalve normally close ; 40 l/min ; 1/2" BSP ; 24 VDC ; with check valve+relief valve
EVNO0C1	Electrovalve normally open ; 40 l/min ; 1/2" BSP ; 12 VDC ; with check valve+relief valve
EVNO0C2	Electrovalve normally open ; 40 l/min ; 1/2" BSP ; 24 VDC ; with check valve+relief valve
EVNC8012	Electrovalve normally close ; 80 l/min ; 1/2" BSP ; 12 VDC ; with check valve+relief valve
EVNC8024	Electrovalve normally close ; 80 l/min ; 1/2" BSP ; 24 VDC ; with check valve+relief valve
EVNO8012	Electrovalve normally open ; 80 l/min ; 1/2" BSP ; 12 VDC ; with check valve+relief valve
EVNO8024	Electrovalve normally open ; 80 l/min ; 1/2" BSP ; 24 VDC ; with check valve+relief valve

ABER is constantly engaged in improving its products and, therefore, reserves itself the right to modify without any further notice the characteristics shown.

PNEUMATIC MECHANIC CONTROLS
DIRECTIONAL VALVES

REFERENCE	DESCRIPTION
AOHCACC1	One-way valve, with warning light+pres.gauge
AOHCACMC1	One-way valve, metallic
AOHCACC2	Double one-way valve, with warning light+pres.gauge
AOHCACMC2	Double one-way valve, metallic
AOHCACC3	Triple one-way valve, with warning light+pres.gauge
AOHCACMC3	Triple one-way valve, metallic
AOHCD4C2	2 way distributor valve, with warning light+pres.gauge - fix up and down
AOHCD7C3	3 way distributor valve, with warning light+pres.gauge - fix up and down
AOHCD5C2	2 way distributor valve, with warning light+pres.gauge - automatic return up and down
AOHCD8C3	3 way distributor valve, with warning light+pres.gauge - automatic return up and down
AOHCD6C2	2 way distributor valve, with warning light+pres.gauge - automatic return up and fix down
AOHCD9C3	3 way distributor valve, with warning light+pres.gauge - automatic return up and fix down
ABCD42	2 way distributor valve, with warning light+pres.gauge - fix up and down
ABCD73	3 way distributor valve, with warning light+pres.gauge - fix up and down
ABCD52	2 way distributor valve, with warning light+pres.gauge - automatic return up and down
ABCD83	3 way distributor valve, with warning light+pres.gauge - automatic return up and down
ABCD62	2 way distributor valve, with warning light+pres.gauge - automatic return up and fix down
ABCD93	3 way distributor valve, with warning light+pres.gauge - automatic return up and fix down
DCM01	Distribuitor Control Meiller type
PTOCM01	PTO Control Meiller type

PNEUMATIC CONTROLS
PNEUMATIC VALVE

REFERENCE	DESCRIPTION
V358910CP	Pneumatic Valve 5x2 R 1/8" BSP

MECHANIC CONTROLS
MECHANIC CONTROLS

REFERENCE	DESCRIPTION
AOHCC0T3C0	Cable for mec. operation 3.0m with lever

ABER is constantly engaged in improving its products and, therefore, reserves itself the right to modify without any further notice the characteristics shown.

PNEUMATIC | MECHANIC CONTROLS
PNEUMATIC KITS

REFERENCE	DESCRIPTION
KPNE12	Pneumatic KIT 12 VDC for PTO
KPNE24	Pneumatic KIT 24 VDC for PTO

PNEUMATIC | MECHANIC CONTROLS
VACCUM KITS

REFERENCE	DESCRIPTION
KVAC12	Vaccum KIT 12 VDC
KVAC24	Vaccum KIT 24 VDC

PNEUMATIC | MECHANIC CONTROLS
HOSES | FITTINGS

REFERENCE	DESCRIPTION
AOHTU6C4	Pollurethane Hose 6*4 (up to 11 bar ; Work T: -20 to 60°C)
AOHTNY6C4	Nylon Hose 6*4 (up to 15 bar ; Work T: -20 to 100°C)
R614CCR	Quick Air Fitting 1/4" BSP, 4x6. Elbow 90°
R614DCR	Quick Air Fitting 1/4" BSP, 4x6. Straight
R618CCR	Quick Air Fitting 1/8" BSP, 4x6. Elbow 90°
R618DCR	Quick Air Fitting 1/8" BSP, 4x6. Straight

PNEUMATIC | MECHANIC CONTROLS
HOSES KITS | HOSE SUPPORT

REFERENCE	DESCRIPTION
KHP01	Hydraulic hoses and connectors kit standard
KHP02	Hose support

ABER is constantly engaged in improving its products and, therefore, reserves itself the right to modify without any further notice the characteristics shown.

TIPPERS SCISSORS
REAR TIPPING

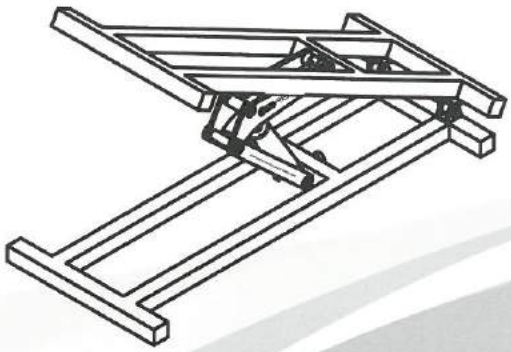

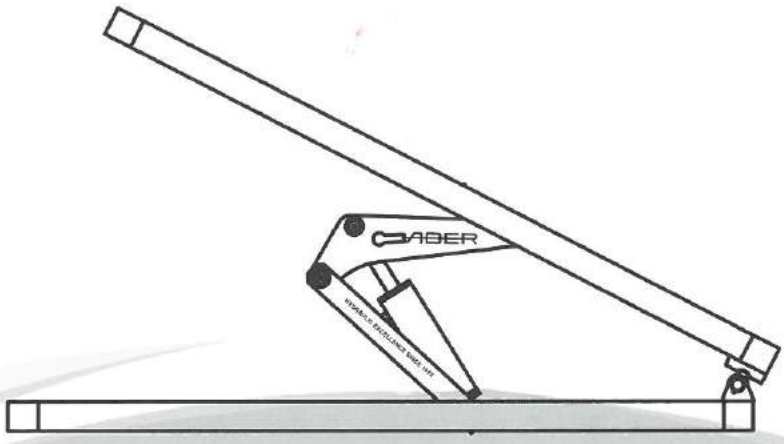

ABER REAR TIPPER SCISSOR SET

ABER TIPPER SCISSOR

REFERENCE	POWER (T)	PRESSURE (Bar)	STROKE (mm)	WEIGHT (kg)
TB1,5T1	1,8	180	684	38
TB3,5T1	3,5	200	881	60
TBVN263200T1	2,6	180	1099	56
TBVN263550T1	2,6	180	1160	58
TBVN264350T1	2,6	180	1398	65

ABER POWER PACK

12 VDC, 2,0kW | 2,0cc | Simple Action | Controller | 6 Liters Plastic Tank
24 VDC, 2,2kW | 2,5cc | Simple Action | Controller | 6 Liters Plastic Tank
Metal Tank available on request
Double action available on request

ABER TIPPING COMPONENTS

2x

For 3,5ton Trucks
Lifting capacity 1,5ton

TIPPER SCISSOR TB1,5T1 + HYDRAULIC POWER PACK 12 VDC + TIPPING COMPONENTS	TIPPER SCISSOR TB1,5T1 + HYDRAULIC POWER PACK 24 VDC + TIPPING COMPONENTS
STB1,5T1A	STB1,5T1B

For 7,5ton Trucks
Lifting capacity 3,5ton

TIPPER SCISSOR TB3,5T1 + HYDRAULIC POWER PACK 12 VDC + TIPPING COMPONENTS	TIPPER SCISSOR TB3,5T1 + HYDRAULIC POWER PACK 24 VDC + TIPPING COMPONENTS
STB3,5T1A	STB3,5T1B

Metal tank, add a M to the reference.
Example STB3,5T1AM

Double action, add a DA to the reference.
Example S1B3,5T1ADA

ABER is constantly engaged in improving its products and, therefore, reserves itself the right to modify, without any further notice the characteristics shown.

HYDRAULIC POWER PACKS & HYDRAULIC UNITS

HYDRAULIC POWER PACKS

REFERENCE	VOLTAGE/MOTOR	PUMP DISPLACEMENT	TANK	EFFECT	CONTROLLER
C0122025M12D1	12VDC 2,0kW	2,5cc/rot	12,5l Metallic	Double	Yes
C0122025M12S1	12VDC 2,0kW	2,5cc/rot	12,5l Metallic	Simple	Yes
C0242225M12D1	24VDC 2,2kW	2,5cc/rot	12,5l Metallic	Double	Yes
C0242225M12S1	24VDC 2,2kW	2,5cc/rot	12,5l Metallic	Simple	Yes
C0243033M18D1	24VDC 3,0kW	3,3cc/rot	18,0l Metallic	Double	Yes
C0243033M18S1	24VDC 3,0kW	3,3cc/rot	18,0l Metallic	Simple	Yes
C2201837P08D1	220VDC 1,85kW	3,7cc/rot	8,0l Plastic	Double	Yes
C2201837P08S1	220VDC 1,85kW	3,7cc/rot	8,0l Plastic	Simple	Yes
C0122020P06D1	12VDC 2,0kW	2,0cc/rot	6,0l Plastic	Double	Yes
C0122020P06S1	12VDC 2,0kW	2,0cc/rot	6,0l Plastic	Simple	Yes
C0242225P06D1	24VDC 2,2 kW	2,5cc/rot	6,0l Plastic	Double	Yes
C0242225P06S1	24VDC 2,2 kW	2,5cc/rot	6,0l Plastic	Simple	Yes

Note: Different configurations can be made

REFERENCE	DESCRIPTION OF THE COMPONENTS FOR SINGLE ACTING HYDRAULIC POWER PACKS
CCE01	Exterior Controller
CCE03	Exterior Controller with Emergency Button
CB1	Power Pack Button
CJ1	Power Pack Joystick

REFERENCE	DESCRIPTION OF THE COMPONENTS FOR DOUBLE ACTING HYDRAULIC POWER PACKS
CCE02	Exterior Controller
CDEE01201	Electrovalve 12 VDC
CDEE02401	Electrovalve 24 VDC
CDEE22001	Electrovalve 220 VDC
CCCT008	Aluminium Block
CCCT021	Intermediate Aluminium Block
CCCT015	Plug
CCPAR174	Bolt ISO 4762 - M8x55-12.9

Note: It is possible to change a Single Acting Hydraulic Power Pack to a Double Acting Hydraulic Power Pack, for one or multiple Double Acting Cylinders.
For this transformation please contact aber@aber.pt

HYDRAULIC POWER PACKS & HYDRAULIC UNITS

HYDRAULIC UNITS

REFERENCE	VOLTAGE/MORTOR	PUMP DISPLACEMENT	TANK
HCAP01	380VDC 5,5kW	16cc/rot + 12cc/rot	160l

Note: Different configurations can be made

ABER is constantly engaged in improving its products and, therefore, reserves itself the right to modify, without any further notice the characteristics shown.

OIL TANKS

HYNESUR
SUMINISTROS DE HIDRÁULICA Y NEUMÁTICA DEL SUR, S.L.

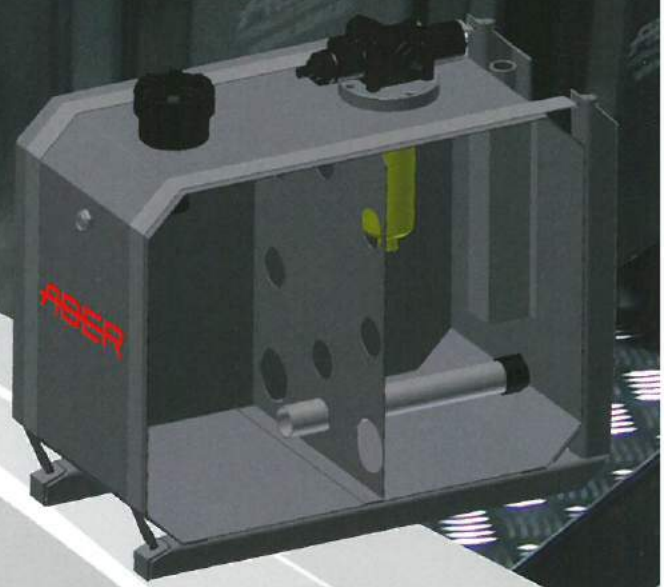

THE BEST QUALITY OIL TANK ON THE MARKET

STANDARD BRACKETS IN STAINLESS STEEL

BAFFLE PLATE

Baffle Plates are used to preserve stability.

INNOVATIVE SUPPORTS

Allows Side and Rear Mounting

INNOVATIVE SUCTION LINE

Allows to use oil that is not coming from the hydraulic system.

PATENTED PENDING

MATERIAL 2mm|2,5mm THICK

PAINTED 2 COATS WITH BLACK FINISH

BREATHER/FILLER WITH INTEGRAL AIR FILTER

SEVERAL MOUNTING OPTIONS

TWO OIL RETURN AVAILABLE

aber@aber.pt

OIL TANKS

CAPACITY FROM 80 LITERS TO 200 LITERS

SIDE MOUNTING

PATENTED PENDING

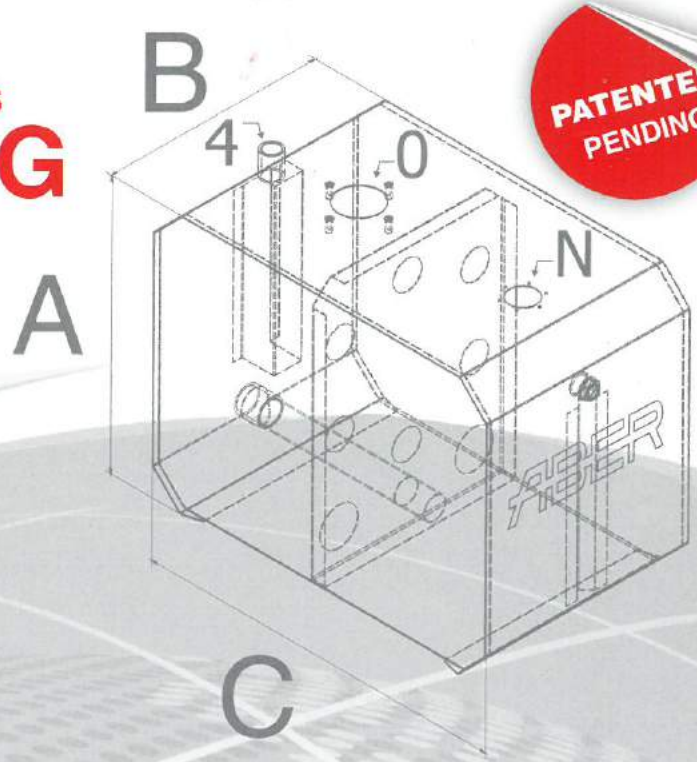

CAPACITY LITERS	A mm	B mm	C mm	SUCTION PIPE " BSP
80	510	290	640	1" 1/2
100	510	350	640	1" 1/2
130	550	360	710	1" 1/2
160	550	450	710	1" 1/2
200	550	560	710	1" 1/2

for other dimensions please contact ABER aber@aber.pt

HOW TO ORDER

REF.	CAPACITY	MATERIAL	LEVEL	FILLER/BREATHER	MOUNTING OPTIONS	SUPPORT
TSB +		+	+	+	+	+

THE STANDARD CONFIGURATION IS MARKED WITH RED

CAPACITY LITERS	MATERIAL	LEVEL	FILLER/BREATHER	MOUNTING OPTIONS					SUPPORT
80	**FE** Steel	**R** Round Oil Level Indicator	**N** Ready for Filler Cap Plug	**0** Ready for Tank Top Oil Return Filter our Flange for Valve	**1** Tank Top Oil Return Filter Single Port For Double Port add A *Example* 1A	**2** Flange to Pneumatic Distributor + Oil Filter 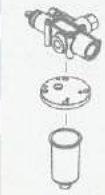 Distributor not included	**3** Flange to Electrical Distributor + Oil Filter Distributor not included	**4** Direct Oil Return	**S1** Side Belt Support
100	**AL** Aluminium	**L** Long Optical Oil Level Indicator	**FB** Filler Cap Breather Plug with Integral Air Filter 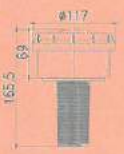						**S2** Side/Rear Belt Support With S2, the Tank without any change can be assembly as lateral or as rear tank.
130	**IX** Stainless Steel								
160									
200									

Note: To order the Oil Tank with manometer add "M" to the final code

EXAMPLE

TSB 160 FE L FB 1 S1 M

Tank with 160 liters, Side Mounting with Brackets, made in Steel, with Long Optical Oil Level, Filler Cap with Integral Air Filter, Tank Top Return Filter (Single), and Side Belt Support with manometer

ABER is constantly engaged in improving its products and, therefore, reserves itself the right to modify, without any further notice the characteristics shown.

OIL TANKS

CAPACITY FROM 100 LITERS TO 245 LITERS

REAR MOUNTING

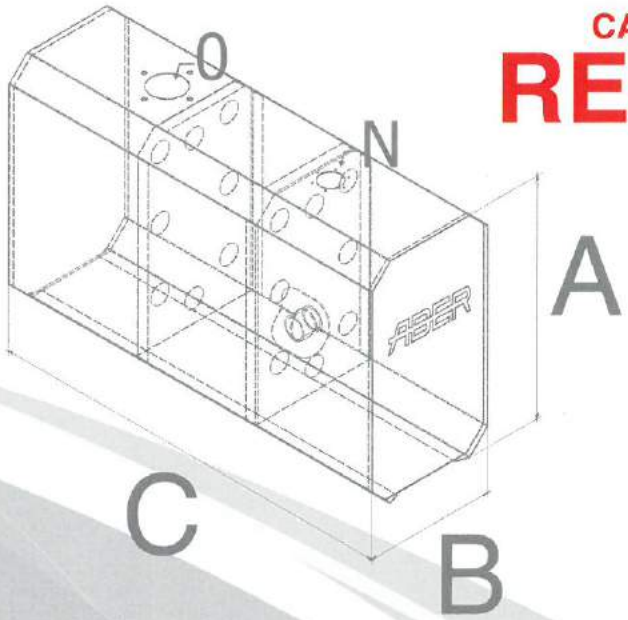

CAPACITY LITERS	A mm	B mm	C mm	SUCTION PIPE " BSP
100	580	320	600	1" 1/2
120	580	320	720	1" 1/2
140	580	320	840	1" 1/2
170	580	320	1000	1" 1/2
200	580	320	1170	1" 1/2
245	760	320	1000	1" 1/2

for other dimensions please contact ABER aber@aber.pt

HOW TO ORDER

REF.		CAPACITY		MATERIAL		LEVEL		FILLER/BREATHER		MOUNTING OPTIONS		SUPPORT
TRB	+		+		+		+		+		+	

THE STANDARD CONFIGURATION IS MARKED WITH RED

CAPACITY LITERS	MATERIAL	LEVEL	FILLER/BREATHER	MOUNTING OPTIONS					SUPPORT
100	**FE** Steel	**R** Round Oil Level Indicator	**N** Ready for Filler Cap Plug	**0** Ready for Tank Top Oil Return Filter our Flange for Valve	**1** Tank Top Oil Return Filter Single Port For Double Port add A *Example* 1A	**2** Flange to Pneumatic Distributor + Oil Filter Distributor not included	**3** Flange to Electrical Distributor + Oil Filter Distributor not included	**4** Direct Oil Return	**R1** Rear Belt Support
120	**AL** Aluminium		**FB** Filler Cap Breather Plug with Integral Air Filter 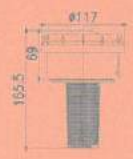						**R2** Side Belt Support
140	**IX** Stainless Steel								
170		**L** Long Optical Oil Level Indicator							
200									
245									

Note: To order the Oil Tank with manometer add "M" to the final code

EXAMPLE

TSB 245 AL L FB 1 R1 M

Tank with 245 liters, Rear Mounting with Brackets, made in Aluminium, with Long Optical Oil Level, Filler Cap with Integral Air Filter, Tank Top Return Filter (Single), and Rear Belt Support with manometer

ABER is constantly engaged in improving its products and, therefore, reserves itself the right to modify without any further notice the characteristics shown.

OIL TANKS

CAPACITY FROM 15 LITERS TO 80 LITERS

CHASSIS MOUNTING

CAPACITY LITERS	A mm	B mm	C mm	X mm	SUCTION PIPE " BSP
15	215	280	255	65	3/4"
20	195	320	370	65	3/4"
35	195	520	370	65	1"
45	290	500	360	65	1" 1/4
60	265	605	405	65	1" 1/4
80	310	380	800	65	1" 1/4

for other dimensions please contact ABER aber@aber.pt

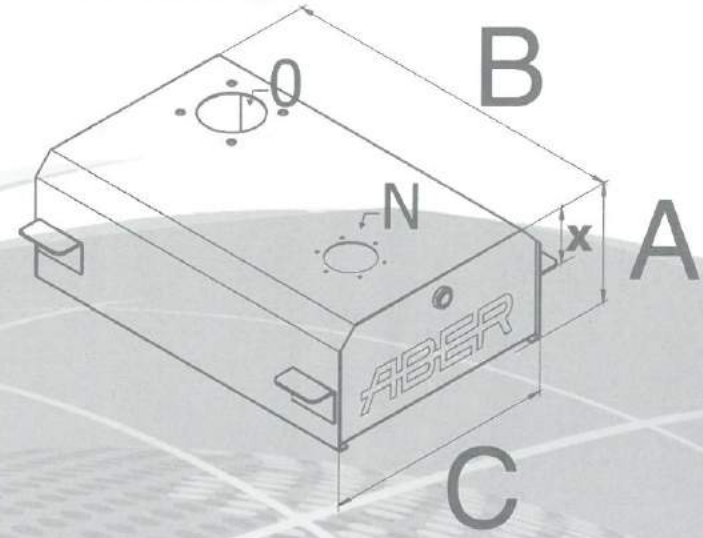

HOW TO ORDER

REF.		CAPACITY		MATERIAL		LEVEL		FILLER/BREATHER		MOUNTING OPTIONS
TC	+		+		+		+		+	

THE STANDARD CONFIGURATION IS MARKED WITH RED

CAPACITY LITERS	MATERIAL	LEVEL	FILLER/BREATHER	MOUNTING OPTIONS				
15	**FE** Steel	**R** Round Oil Level Indicator	**N** Ready for Filler Cap Plug	**0** Ready for Tank Top Oil Return Filter our Flange for Valve	**1** Tank Top Oil Return Filter Single Port For Double Port add A *Example* 1A	**2** Flange to Pneumatic Distributor + Oil Filter Distributor not included	**3** Flange to Electrical Distributor + Oil Filter Distributor not included	**4** Direct Oil Return
20	**AL** Aluminium		**FB** Filler Cap Breather Plug with Integral Air Filter					
35	**IX** Stainless Steel							
45		**L** Long Optical Oil Level Indicator						
60								
80								

Note: To order the Oil Tank with manometer add "M" to the final code

EXAMPLE

TC 35 FE R FB 1 M

Tank with 35 liters, Chassis Mounting, made in Steel, with Round Oil Level, Filler Cap Breather Plug with Integral Air Filter, and Tank Top Return Filter (Single) with manometer

ABER is constantly engaged in improving its products and, therefore, reserves itself the right to modify without any further notice the characteristics shown.

OIL TANKS

CAPACITY FROM 25 LITERS TO 80 LITERS

SIDE MOUNTING

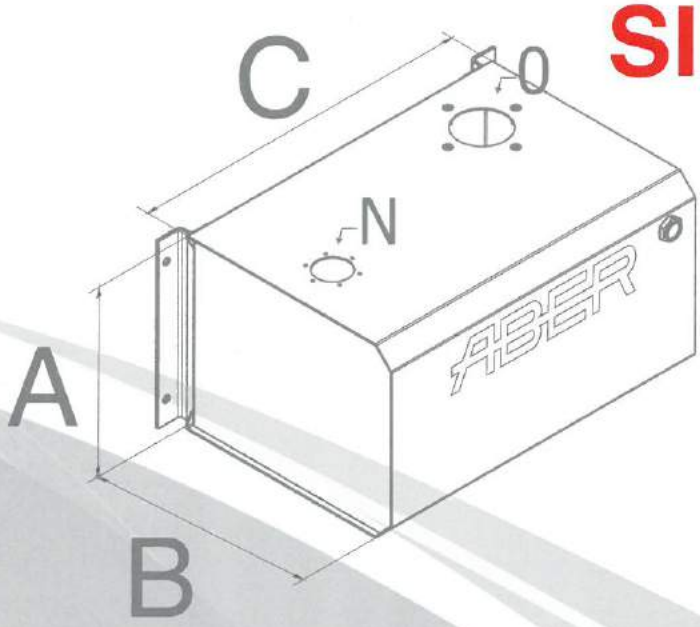

CAPACITY LITERS	A mm	B mm	C mm	SUCTION PIPE " BSP
25	280	280	380	1"
30	280	320	360	1"
35	280	280	500	1"
60	310	380	560	1" 1/4
80	500	360	500	1" 1/4

for other dimensions please contact ABER aber@aber.pt

HOW TO ORDER

REF.		CAPACITY		MATERIAL		LEVEL		FILLER/BREATHER		MOUNTING OPTIONS
TS	+		+		+		+		+	

THE STANDARD CONFIGURATION IS MARKED WITH RED

CAPACITY LITERS	MATERIAL	LEVEL	FILLER/BREATHER	MOUNTING OPTIONS				
25	**FE** Steel	**R** Round Oil Level Indicator	**N** Ready for Filler Cap Plug	**0** Ready for Tank Top Oil Return Filter our Flange for Valve	**1** Tank Top Oil Return Filter Single Port For Double Port add A *Example* 1A	**2** Flange to Pneumatic Distributor + Oil Filter 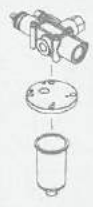 Distributor not included	**3** Flange to Electrical Distributor + Oil Filter Distributor not included	**4** Direct Oil Return
30	**AL** Aluminium		**FB** Filler Cap Breather Plug with Integral Air Filter					
35	**IX** Stainless Steel							
60		**L** Long Optical Oil Level Indicator						
80								

Note: To order the Oil Tank with manometer add "M" to the final code

EXAMPLE

TS 30 FE L FB 1 M

Tank with 30 liters, Side Mounting, made in Steel, with Long Optical Oil Level, Filler Cap with Integral Air Filter, Tank Top Return Filter (Single) with manometer

ABER is constantly engaged in improving its products and, therefore, reserves itself the right to modify without any further notice the characteristics shown.

OIL TANKS

CAPACITY FROM 10 LITERS TO 80 LITERS

REAR MOUNTING

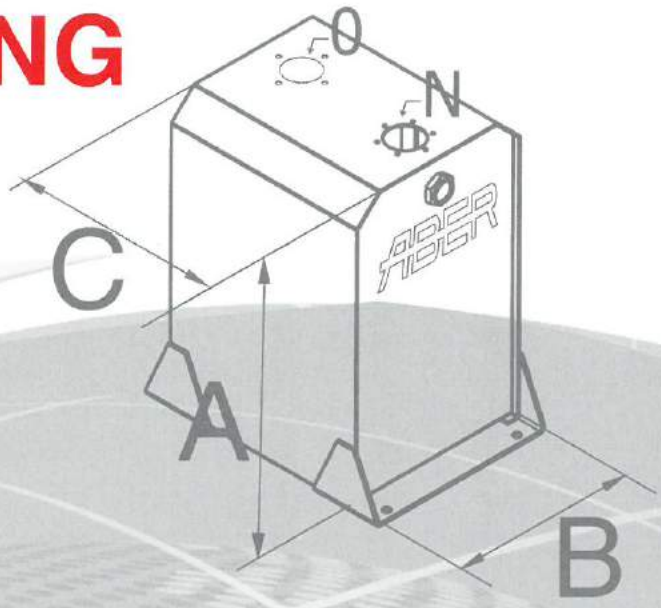

CAPACITY LITERS	A mm	B mm	C mm	SUCTION PIPE " BSP
10	265	220	260	1"
20	265	220	450	1"
40	475	290	330	1"
60	475	290	490	1" 1/4
80	475	290	650	1" 1/2

for other dimensions please contact ABER aber@aber.pt

HOW TO ORDER

REF. CAPACITY MATERIAL LEVEL FILLER/BREATHER MOUNTING OPTIONS

TR + ____ + ____ + ____ + ____ + ____

THE STANDARD CONFIGURATION IS MARKED WITH RED

CAPACITY LITERS	MATERIAL	LEVEL	FILLER/BREATHER	MOUNTING OPTIONS				
10	**FE** Steel	**R** Round Oil Level Indicator	**N** Ready for Filler Cap Plug	**0** Ready for Tank Top Oil Return Filter our Flange for Valve	**1** Tank Top Oil Return Filter Single Port For Double Port add A *Example* 1A	**2** Flange to Pneumatic Distributor + Oil Filter 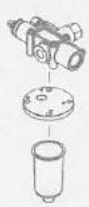 Distributor not included	**3** Flange to Electrical Distributor + Oil Filter Distributor not included	**4** Direct Oil Return
20	**AL** Aluminium		**FB** Filler Cap Breather Plug with Integral Air Filter					
40	**IX** Stainless Steel							
60		**L** Long Optical Oil Level Indicator						
80								

Note: To order the Oil Tank with manometer add "M" to the final code

EXAMPLE

TR 40 FE L FB 1 M

Tank with 40 liters, Rear Mounting, made in Steel, with Long Optical Oil Level, Filler Cap with Integral Air Filter, Tank Top Return Filter (Single) with manometer

ABER is constantly engaged in improving its products and, therefore, reserves itself the right to modify without any further notice the characteristics shown.

ABER

POWER TAKE OFF'S

ABER have a high range of PTO's to use in several Gear Boxes Brands

ZF | MERCEDES | MITSUBISHI
TOYOTA | SCANIA | ISUZU | MAZ
RENAULT | VW/MAN | KAMAZ
EATON/FULLER | IVECO | VOLVO
ALLISON | SHAANXI | NISSAN
GAZ

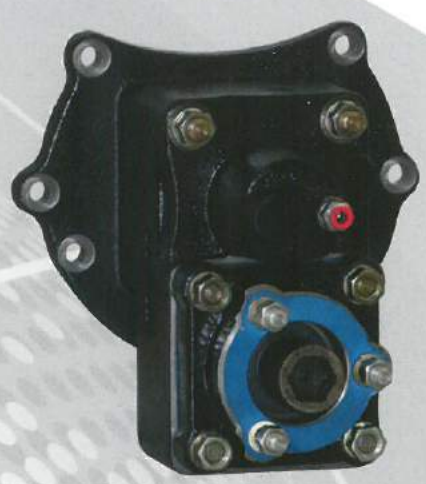

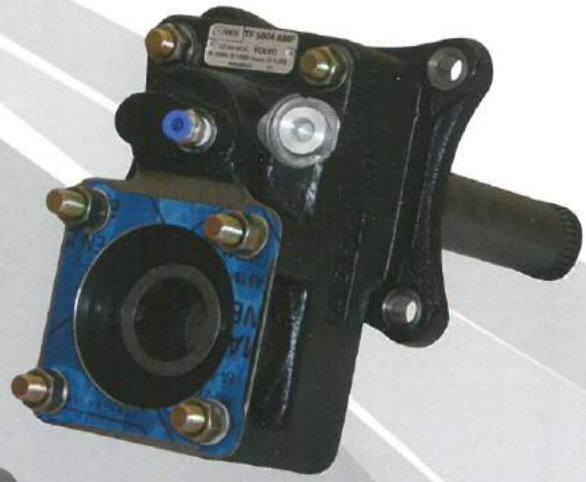

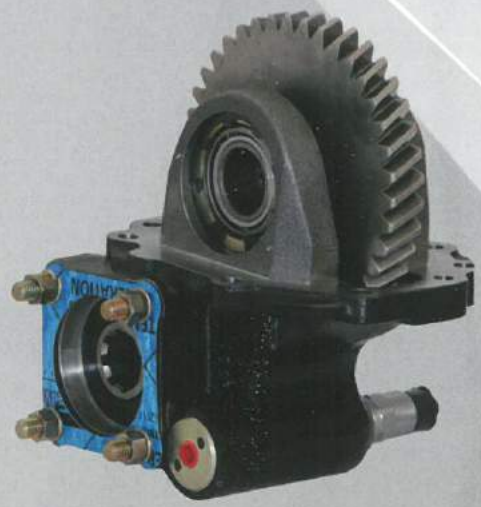

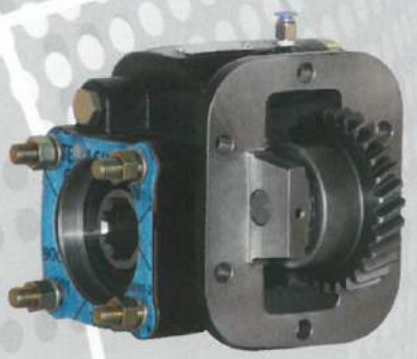

aber@aber.pt

POWER TAKE OFF'S
TOYOTA

REFERENCE	OBSERVATION	GEAR BOX
TF1001M*	-	M150 ; M153 ; M155 ; Mechanic Control
TF1001P*	-	M150 ; M153 ; M155 ; Pneumatic Control
TF1001V*	-	M150 ; M153 ; M155 ; Vacuum Control
TF1006M*	-	H260 ; Mechanic Control
TF1006P*	-	H260 ; Pneumatic Control
TF1006V*	-	H260 ; Vacuum Control
TF1008P*	-	R451 ; Pneumatic Control
TF1008V*	-	R451 ; Vacuum Control

POWER TAKE OFF'S
MITSUBISHI

REFERENCE	OBSERVATION	GEAR BOX
TF2001AM*	-	M2-S5 ; M3-S5 ; Mechanic Control
TF2001AP*	-	M2-S5 ; M3-S5 ; Pneumatic Control
TF2001AV*	-	M2-S5 ; M3-S5 ; Vacuum Control
TF2002AM*	-	M015S5 ; Mechanic Control
TF2002AP*	-	M015S5 ; Pneumatic Control
TF2002AV*	-	M015S5 ; Vacuum Control
TF2003AM*	-	M035S5 ; M035S6 ; Mechanic Control
TF2003AP*	-	M035S5 ; M035S6 ; Pneumatic Control
TF2003AV*	-	M035S5 ; M035S6 ; Vacuum Control
TF2004AM*	-	M025S5 ; Mechanic Control
TF2004AP*	-	M025S5 ; Pneumatic Control
TF2004AV*	-	M025S5 ; Vacuum Control
TF2005AM*	-	M040S5 ; Mechanic Control
TF2005AP*	-	M040S5 ; Pneumatic Control
TF2005AV*	-	M040S5 ; Vacuum Control
TF2006AM*	-	M027S5 ; M038S5 ; M038S6 ; Mechanic Control
TF2006AP*	-	M027S5 ; M038S5 ; M038S6 ; Pneumatic Control
TF2006AV*	-	M027S5 ; M038S5 ; M038S6 ; Vacuum Control
TF2007AM*	-	M036S5 ; M036S6 ; Mechanic Control
TF2007AP*	-	M036S5 ; M036S6 ; Pneumatic Control
TF2007AV*	-	M036S5 ; M036S6 ; Vacuum Control

* ALSO AVAILABLE WITH ELECTRIC/MECHANIC SENSOR ON/OFF

ABER is constantly engaged in improving its products and, therefore, reserves itself the right to modify without any further notice the characteristics shown.

POWER TAKE OFF'S
ISUZU

REFERENCE	OBSERVATION	GEAR BOX
TF3003M*	-	MSA 5G ; MSA 5P ; Mechanic Control
TF3003P*	-	MSA 5G ; MSA 5P ; Pneumatic Control
TF3003V*	-	MSA 5G ; MSA 5P ; Vacuum Control
TF3004M*	-	MSA 5D ; MSA 5S ; MXA 5R ; MXA 6R ; MXA 6S ; Mechanic Control
TF3004P*	-	MSA 5D ; MSA 5S ; MXA 5R ; MXA 6R ; MXA 6S ; Pneumatic Control
TF3004V*	-	MSA 5D ; MSA 5S ; MXA 5R ; MXA 6R ; MXA 6S ; Vacuum Control
TF3005M*	-	MBP 6Q ; Mechanic Control
TF3005P*	-	MBP 6Q ; Pneumatic Control
TF3005V*	-	MBP 6Q ; Vacuum Control
TF3006M*	-	MSB 5G ; MSB 5S ; MSB 5M ; MSB 5R ; Mechanic Control
TF3006P*	-	MSB 5G ; MSB 5S ; MSB 5M ; MSB 5R ; Pneumatic Control
TF3006V*	-	MSB 5G ; MSB 5S ; MSB 5M ; MSB 5R ; Vacuum Control
TF3008M*	-	MYY - 5T ; MYY - 6S ; Mechanic Control
TF3008P*	-	MYY - 5T ; MYY - 6S ; Pneumatic Control
TF3008V*	-	MYY - 5T ; MYY - 6S ; Vacuum Control
TF3009M*	-	MZZ-5D ; MZZ-6C ; MZZ-6U ; MZZ-6W ; MOZ-10 Mechanic Control
TF3009P*	-	MZZ-5D ; MZZ-6C ; MZZ-6U ; MZZ-6W ; MOZ-10 ; Pneumatic Control
TF3009V*	-	MZZ-5D ; MZZ-6C ; MZZ-6U ; MZZ-6W ; MOZ-10 ; Vacuum Control
TF3010M*	-	MZZ-6F ; MZZ-6R ; MZZ-6S ; MOZ-53 ; Mechanic Control
TF3010P*	-	MZZ-6F ; MZZ-6R ; MZZ-6S ; MOZ-53 ; Pneumatic Control
TF3010V*	-	MZZ-6F ; MZZ-6R ; MZZ-6S ; MOZ-53 ; Vacuum Control
TF3012M*	-	MBP-6R ; Mechanic Control
TF3012P*	-	MBP-6R ; Pneumatic Control
TF3012V*	-	MBP-6R ; Vacuum Control
TF3013P*	-	MAG 6G ; MAG 6W ; MAL 5T ; MAL 6Q ; MAL 6S ; MAJ 7T ; MAJ 7U ; Pneumatic Control
TF3014P*	-	MZW 6P ; Pneumatic Control

POWER TAKE OFF'S
ZF (TWIN OUTPUT)

REFERENCE	OBSERVATION	GEAR BOX
TF4201AMP*	-	S5-50 ; S5-90 ; S6-65 ; S6-66 ; S6-70 ; S6-75 ; S6-80 ; S6-90 ; 6S-800 ; 6S-1000 (ratio 1:1,56)

* ALSO AVAILABLE WITH ELECTRIC/MECHANIC SENSOR ON/OFF

ABER is constantly engaged in improving its products and, therefore, reserves itself the right to modify without any further notice the characteristics shown.

POWER TAKE OFF'S AND ADAPTER KIT'S
ZF

REFERENCE	OBSERVATION	GEAR BOX
TF4001AMP*	-	S5-35 (ratio 1:1,32)
TF4001SP*	-	S5-35 (ratio 1:1)
TF4002AMP*	-	S5-50 ; S5-90 ; S6-65 ; S6-66 ; S6-70 ; S6-75 ; S6-80 ; S6-90 ; 6S-800 ; 6S-1000 (ratio 1:1,32)
TF4002SP*	-	S5-50 ; S5-90 ; S6-65 ; S6-66 ; S6-70 ; S6-75 ; S6-80 ; S6-90 ; 6S-800 ; 6S-1000 (ratio 1:1)
TF4003AMP*	VK4002 + TF4002AMP	16-S-130 ; 16-S-160 ; 16-S-190 ; 16-S-220 ; 16-S-112/17,28 ; (trilobe) (ratio 1:1,32)
TF4003SP*	VK4002 + TF4002SP	16-S-130 ; 16-S-160 ; 16-S-190 ; 16-S-220 ; 16-S-112/17,28 ; (trilobe) (ratio 1:1)
TF4004AMP*	VK4001 + TF4002AMP	8-S-151 ; 12-S-2100 ; 12-S-2300 ; 12-S-2800 ; 16-S-151 ; 16-S-181 ; 16-S-221 ; 16-S-1620 TD ; 16-S-1820 TO ; 16-S-1920 TD ; 16-S-2220 TO/TD ; 16-S-2520 TO ; 8S-1620 TD ; 8S-1820 TO ; 8S-220 TO ; 16S-2320 TD ; 16S-2330 TD ; 16S-2720 TO ; 16S-2730 TO (Z=14) (ratio 1:1,32)
TF4004SP*	VK4001 + TF4002SP	8-S-151 ; 12-S-2100 ; 12-S-2300 ; 12-S-2800 ; 16-S-151 ; 16-S-181 ; 16-S-221 ; 16-S-1620 TD ; 16-S-1820 TO ; 16-S-1920 TD ; 16-S-2220 TO/TD ; 16-S-2520 TO ; 8S-1620 TD ; 8S-1820 TO ; 8S-220 TO ; 16S-2320 TD ; 16S-2330 TD ; 16S-2720 TO ; 16S-2730 TO (Z=14) (ratio 1:1)
TF4005AMP*	VK4005 + TF4002AMP	16-K-130 ; 16-S-112 ; 16-S-150 ; (trilobe) (ratio 1:1,32)
TF4005SP*	VK4005 + TF4002SP	16-K-130 ; 16-S-112 ; 16-S-150 ; (trilobe) (ratio 1:1)
TF4006AMP*	VK4006 + TF4002AMP	16-S-112 A ; 16-S-130 A ; 16-S-160 A ; 16-S-190 A ; 16-S-220 A ; (trilobe) (ratio 1:1,32)
TF4006SP*	VK4006 + TF4002SP	16-S-112 A ; 16-S-130 A ; 16-S-160 A ; 16-S-190 A ; 16-S-220 A ; (trilobe) (ratio 1:1)
TF4011AMP*	VK4007 + TF4002AMP	16-S-151 IT ; 16-S-181 IT ; 16-S-221 IT ; 16-S-1621 TD IT ; 16-S-1821 TO IT ; 16-S-1921 TD IT ; 16-S-2221 TD/TO IT ; 16-S-2321 TD IT ; 16-S-2331 TD IT ; 16-S-2521 TO IT ; 16-S-2721 TO IT ; 16-S-2731 TO IT ; (Z=14) (ratio 1:1,32)
TF4011SP*	VK4007 + TF4002SP	16-S-151 IT ; 16-S-181 IT ; 16-S-221 IT ; 16-S-1621 TD IT ; 16-S-1821 TO IT ; 16-S-1921 TD IT ; 16-S-2221 TD/TO IT ; 16-S-2321 TD IT ; 16-S-2331 TD IT ; 16-S-2521 TO IT ; 16-S-2721 TO IT ; 16-S-2731 TO IT ; (Z=14) (ratio 1:1)
TF4012AMP*	VK4008 + TF4002AMP	16-S-251 IT ; 16-S-2720 TO IT ; (Z=14) (ratio 1:1,32)
TF4012SP*	VK4008 + TF4002SP	16-S-251 IT ; 16-S-2720 TO IT ; (Z=14) (ratio 1:1)
TF4013AMP*	VK4009 + TF4002AMP	16-S-150 IT ; (trilobe) (ratio 1:1,32)
TF4013SP*	VK4009 + TF4002SP	16-S-150 IT ; (trilobe) (ratio 1:1)
TF4014AMP*	-	S6-36 ; 6S-850 ; 6S-700 (ratio 1:1,32)
TF4014SP*	-	S6-36 ; 6S-850 ; 6S-700 (ratio 1:1)
TF4015AMP*	VK4015 + TF4002AMP	5-90 GP ; 5-92 GP ; 4-120 GP (ratio 1:1,32)
TF4015SP*	VK4015 + TF4002SP	5-90 GP ; 5-92 GP ; 4-120 GP (ratio 1:1)
TF4016AMP*	VK4016 + TF4002AMP	5-110 GPA (ratio 1:1,32)
TF4016SP*	VK4016 + TF4002SP	5-110 GPA (ratio 1:1)
TF4017AMP*	VK4017 + TF4002AMP	5-110 GP ; 5-111 GP ; 4-150 GP (ratio 1:1,32)
TF4017SP*	VK4017 + TF4002SP	5-110 GP ; 5-111 GP ; 4-150 GP (ratio 1:1)
TF4018AMP*	VK4Q18 + TF4002AMP	9-S-75/13,16 ; 9-S-75/9,56 (ratio 1:1,32)
TF4018SP*	VK4018 + TF4002SP	9-S-75/13,16 ; 9-S-75/9,56 (ratio 1:1)
TF4019AMP*	VK4019 + TF4002AMP	9-S-109/10,25 ; 9-S-109/10,24 ; 16-S-109/11,86 ; 16-S-109/13,53 (ratio 1:1,32)
TF4019SP*	VK4019 + TF4002SP	9-S-109/10,25 ; 9-S-109/10,24 ; 16-S-109/11,86 ; 16-S-109/13,53 (ratio 1:1)
TF4020AMP*	VK4020 + TF4002AMP	9-S-109/12,92 ; 16-S-109/13,04 ; 16-S-109/13,30 ; 16-S-109/13,42 ; 8-S-109 (ratio 1:1,32)
TF4020SP*	VK4020 + TF4002SP	9-S-109/12,92 ; 16-S-109/13,04 ; 16-S-109/13,30 ; 16-S-109/13,42 ; 8-S-109 (ratio 1:1)
TF4021AMP*	VK4021 + TF4002AMP	9-S-109/12,91 ; 16-S-109/13,31 ; 16-S-109/13,41 ; 9-S-1110 TO/9,48 ; 9-S-1310 TO/9,48 (ratio 1:1,32)

* ALSO AVAILABLE WITH ELECTRIC/MECHANIC SENSOR ON/OFF

ABER is constantly engaged in improving its products and, therefore, reserves itself the right to modify without any further notice the characteristics shown.

REFERENCE	OBSERVATION	GEAR BOX
TF4021SP*	VK4021 + TF4002SP	9-S-109/12,91 ; 16-S-109/13,31 ; 16-S-109/13,41 ; 9-S-1110 TO/9,48 ; 9-S-1310 TO/9,48 (ratio 1:1)
TF4022AMP*	VK4022 + TF4002AMP	12-AS-1800 ; 12-AS-2301 ; 16-AS-2601 ; 12-AS-1630 TD ; 12-AS-1930 TD/TO ; 12-AS-2130 TD/TO ; 12-AS-2131 TD ; 12-AS-2140 TD ; 12-AS-2340 TD ; 12-AS-2430 TD ; 12-AS-2540 TD/TO ; 12-AS-2330 TO ; 12-AS-2530 TO ; 12-AS-2740 TO ; 12-AS-2940 TO ; 16-AS-2230 TD ; 16-AS-2601 DD ; 16-AS-2601 OD ; 16-AS-2630 TO (ratio 1:1,32)
TF4022SP*	VK4022 + TF4002SP	12-AS-1800 ; 12-AS-2301 ; 16-AS-2601 ; 12-AS-1630 TD ; 12-AS-1930 TD/TO ; 12-AS-2130 TD/TO ; 12-AS-2131 TD ; 12-AS-2140 TD ; 12-AS-2340 TD ; 12-AS-2430 TD ; 12-AS-2540 TD/TO ; 12-AS-2330 TO ; 12-AS-2530 TO ; 12-AS-2740 TO ; 12-AS-2940 TO ; 16-AS-2230 TD ; 16-AS-2601 DD ; 16-AS-2601 OD ; 16-AS-2630 TO (ratio 1:1)
TF4023AMP*	VK4023 + TF4002AMP	12-AS-1800 IT /1631 TD IT /1931 TD/TO IT /2131 TD/TO IT /2141 TD IT /2301 TD/TO IT /2341 TD IT /2431 TD IT /2331 TO IT /2531 TO IT /2541 TO IT /2741 TO IT /2941 TO IT ; 16-AS-2200 IT /2231 TD IT /2601 TD/TO IT /2631 TO IT (ratio 1:1,32)
TF4023SP*	VK4023 + TF4002SP	12-AS-1800 IT /1631 TD IT /1931 TD/TO IT /2131 TD/TO IT /2141 TD IT /2301 TD/TO IT /2341 TD IT /2431 TD IT /2331 TO IT /2531 TO IT /2541 TO IT /2741 TO IT /2941 TO IT ; 16-AS-2200 IT /2231 TD IT /2601 TD/TO IT /2631 TO IT (ratio 1:1)
TF4024P*	-	S5-42/5,72
TF4026P*	-	S5-42/4,65
TF4027P*	-	S5-42/7,55
TF4028P*	-	S5-42/6,56
TF4029M*	-	5S-200 ; 5S-300 ; 2830.5 ; Mechanic Control
TF4029P*	-	5S-200 ; 5S-300 ; 2830.5 ; Pneumatic Control
TF4029V*	-	5S-200 ; 5S-300 ; 2830.5 ; Vacuum Control
TF4030M*	-	6S-300 ; 6S-350 ; Mechanic Control
TF4030P*	-	6S-300 ; 6S-350 ; Pneumatic Control
TF4030V*	-	6S-300 ; 6S-350 ; Vacuum Control
TF4032M*	-	6S-380 ; 6S-400 ; 2840.6 (left side assembly) ; Mechanic Control
TF4032P*	-	6S-380 ; 6S-400 ; 2840.6 (left side assembly) ; Pneumatic Control
TF4032V*	-	6S-380 ; 6S-400 ; 2840.6 (left side assembly) ; Vacuum Control
TF4033AMP*	-	S5-50 ; S5-90 ; S6-65 ; S6-66 ; S6-70 ; S6-75 ; S6-80 ; S6-90 ; S6-800 ; S6-1000 ; REINFORCED (ratio 1:1)
TF4034AMP*	-	S5-50 ; S5-90 ; S6-65 ; S6-66 ; S6-70 ; S6-75 ; S6-80 ; S6-90 ; S6-800 ; S6-1000 ; REINFORCED (ratio 1:1,73)
TF4035AMP*	-	S5-50 ; S5-90 ; S6-65 ; S6-66 ; S6-70 ; S6-75 ; S6-80 ; S6-90 ; S6-800 ; S6-1000 ; REINFORCED (ratio 1:1,56)
TF4036AMP*	-	S5-50 ; S5-90 ; S6-65 ; S6-66 ; S6-70 ; S6-75 ; S6-80 ; S6-90 ; S6-800 ; S6-1000 ; REINFORCED (ratio 1:1,35)
TF4037AMP*	-	S6-36 ; 6S-850 ; 6S-700 ; REINFORCED (ratio 1:1,56)
TF4038AMP*	-	S6-36 ; 6S-850 ; 6S-700 ; REINFORCED (ratio 1:1,35)
TF4039AMP*	-	S6-36 ; 6S-850 ; 6S-700 ; REINFORCED (ratio 1:1)
TF4040AMP*	-	S6-36 ; 6S-850 ; 6S-700 ; REINFORCED (ratio 1:1,73)
TF4041AMP*	VK4001 + TF4033AMP	8-S-151 ; 12-S-2100 ; 12-S-2300 ; 12-S-2800 ; 16-S-151 ; 16-S-181 ; 16-S-221 ; 16-S-1620 TD ; 16-S-1820 TO ; 16-S-1920 TD ; 16-S-2220 TO/TD ; 16-S-2520 TO ; 8-S-1620 TD ; 8-S-1820 TO ; 8-S-220 TO ; 16-S-2320 TD ; 16-S-2330 TD ; 16-S-2720 TO ; 16-S-2730 TO (Z=14) ; REINFORCED (ratio 1:1)
TF4042AMP*	VK4002 + TF4033AMP	16-S-130 ; 16-S-160 ; 16-S-190 ; 16-S-220 ; 16-S-112/17,28 ; (trilobe) ; REINFORCED (ratio 1:1)
TF4043AMP*	VK4005 + TF4033AMP	16-K-130 ; 16-S-112 ; 16-S-150 ; (trilobe) ; REINFORCED (ratio 1:1)
TF4044AMP*	VK4006 + TF4033AMP	16-S-112 A ; 16-S-130 A ; 16-S-160 A ; 16-S-190 A ; 16-S-220 A ; (trilobe) ; REINFORCED (ratio 1:1)
TF4045AMP*	VK4007 + TF4033AMP	16-S-151 IT ; 16-S-181 IT ; 16-S-221 IT ; 16-S-1621 TD IT ; 16-S-1821 TD IT ; 16-S-1921 TD IT ; 16-S-2221 TD/TO IT ; 16-S-2321 TD IT ; 16-S-2331 TD IT ; 16-S-2521 TO IT ; 16-S-2721 TO IT ; 16-S-2731 TO IT (Z=14) ; REINFORCED (ratio 1:1)
TF4046AMP*	VK4008 + TF4033AMP	16-S251 IT ; 16-S-2720 TO IT (Z=14) ; REINFORCED (ratio 1:1)
TF4047AMP*	VK4009 + TF4033AMP	16-S-150 IT ; (trilobe) ; REINFORCED (ratio 1:1)
TF4048AMP*	VK4015 + TF4033AMP	5-90 GP ; 5-92 GP ; 4-120 GP ; REINFORCED (ratio 1:1)
TF4049AMP*	VK4016 + TF4033AMP	5-110 GPA ; REINFORCED (ratio 1:1)
TF4050AMP*	VK4017 + TF4033AMP	5-110 GP ; 5-111 GP ; 4-150 GP ; REINFORCED (ratio 1:1)

* ALSO AVAILABLE WITH ELECTRIC/MECHANIC SENSOR ON/OFF

ABER is constantly engaged in improving its products and, therefore, reserves itself the right to modify without any further notice the characteristics shown.

REFERENCE	OBSERVATION	GEAR BOX
TF4051AMP*	VK4018 + TF4033AMP	9-S-75/13,16 ; 9-S-75/9,56 ; REINFORCED (ratio 1:1)
TF4052AMP*	VK4019 + TF4033AMP	9-S-109/10,25 ; 9-S-109/10,24 ; 16-S-109/11,86 ; 16-S-109/13,53 ; REINFORCED (ratio 1:1)
TF4053AMP*	VK4020 + TF4033AMP	9-S-109/12,92 ; 16-S-109/13,04 ; 16-S-109/13,30 ; 16-S-109/13,42 ; 8-S-109 ; REINFORCED (ratio 1:1)
TF4054AMP*	VK4021 + TF4033AMP	9-S-109/12,91 ; 16-S-109/13,31 ; 16-S-109/13,41 ; 9-S-1110 TO/9,48 ; 9-S-1310 TO/9,48 ; REINFORCED (ratio 1:1)
TF4055AMP*	VK4022 + TF4033AMP	12-AS-1800 ; 12-AS-2301 ; 16-AS-2200 ; 12-AS-2601 ; 12-AS-1630 TD ; 12-AS-1930 TD/TO ; 12-AS-2130 TD/TO ; 12-AS-2131 TD ; 12-AS-2140 TD ; 12-AS-2340 TD ; 12-AS-2430 TD ; 12-AS-2540 TD/TO ; 12-AS-2330 TO ; 12-AS-2530 TO ; 12-AS-2740 TO ; 12-AS-2940 TO ; 16-AS-2230 TD ; 16-AS-2601 DD/OD ; 16-AS-2630 TO ; REINFORCED (ratio 1:1)
TF4056AMP*	VK4023 + TF4033AMP	12-AS-1800 IT ; 12-AS-1631 TD IT ; 12-AS-1931 TD/TO IT ; 12-AS-2131 TD/TO IT ; 12-AS-2141 TD IT ; 12-AS-2301 TD/TO IT ; 12-AS-2341 TD IT ; 12-AS-2431 TD IT ; 12-AS-2331 TO IT ; 12-AS-2531 TO IT ; 12-AS-2541 TO IT ; 12-AS-2740 TO ; 12-AS-2940 TO ; 16-AS-2230 TD ; 16-AS-2601 DD/OD ; 16-AS-2630 TO ; REINFORCED (ratio 1:1)
TF4057AMP*	VK4001 + TF4034AMP	8-S-151 ; 12-S-2100 ; 12-S-2300 ; 12-S-2800 ; 16-S-151 ; 16-S-181 ; 16-S-221 ; 16-S-1620 TD ; 16-S-1820 TO ; 16-S-1920 TD ; 16-S-2220 TO/TD ; 16-S-2520 TO ; 8-S-1620 TD ; 8-S-1820 TO ; 8-S-220 TO ; 16-S-2320 TD ; 16-S-2330 TD ; 16-S-2720 TO ; 16-S-2730 TO (Z=14) ; REINFORCED (ratio 1:1,73)
TF4058AMP*	VK4002 + TF4034AMP	16-S-130 ; 16-S-160 ; 16-S-190 ; 16-S-220 ; 16-S-112/17,28 ; (trilobe) ; REINFORCED (ratio 1:1,73)
TF4059AMP*	VK4005 + TF4034AMP	16-K-130 ; 16-S-112 ; 16-S-150 ; (trilobe) ; REINFORCED (ratio 1:1,73)
TF4060AMP*	VK4006 + TF4034AMP	16-S-112 A ; 16-S-130 A ; 16-S-160 A ; 16-S-190 A ; 16-S-220 A ; (trilobe) ; REINFORCED (ratio 1:1,73)
TF4061AMP*	VK4007 + TF4034AMP	16-S-151 IT ; 16-S-181 IT ; 16-S-221 IT ; 16-S-1621 TD IT ; 16-S-1821 TO IT ; 16-S-1921 TD IT ; 16-S-2221 TD/TO IT ; 16-S-2321 TD IT ; 16-S-2331 TD IT ; 16-S-2521 TO IT ; 16-S-2721 TO IT ; 16-S-2731 TO IT (Z=14) ; REINFORCED (ratio 1:1,73)
TF4062AMP*	VK4008 + TF4034AMP	16-S251 IT ; 16-S-2720 TO IT (Z=14) ; REINFORCED (ratio 1:1,73)
TF4063AMP*	VK4009 + TF4034AMP	16-S-150 IT ; (trilobe) ; REINFORCED (ratio 1:1,73)
TF4064AMP*	VK4015 + TF4034AMP	5-90 GP ; 5-92 GP ; 4-120 GP ; REINFORCED (ratio 1:1,73)
TF4065AMP*	VK4016 + TF4034AMP	5-110 GPA ; REINFORCED (ratio 1:1,73)
TF4066AMP*	VK4017 + TF4034AMP	5-110 GP ; 5-111 GP ; 4-150 GP ; REINFORCED (ratio 1:1,73)
TF4067AMP*	VK4018 + TF4034AMP	9-S-75/13,16 ; 9-S-75/9,56 ; REINFORCED (ratio 1:1,73)
TF4068AMP*	VK4019 + TF4034AMP	9-S-109/10,25 ; 9-S-109/10,24 ; 16-S-109/11,86 ; 16-S-109/13,53 ; REINFORCED (ratio 1:1,73)
TF4069AMP*	VK4020 + TF4034AMP	9-S-109/12,92 ; 16-S-109/13,04 ; 16-S-109/13,30 ; 16-S-109/13,42 ; 8-S-109 ; REINFORCED (ratio 1:1,73)
TF4070AMP*	VK4021 + TF4034AMP	9-S-109/12,91 ; 16-S-109/13,31 ; 16-S-109/13,41 ; 9-S-1110 TO/9,48 ; 9-S-1310 TO/9,48 ; REINFORCED (ratio 1:1,73)
TF4071AMP*	VK4022 + TF4034AMP	12-AS-1800 ; 12-AS-2301 ; 16-AS-2200 ; 12-AS-2601 ; 12-AS-1630 TD ; 12-AS-1930 TD/TO ; 12-AS-2130 TD/TO ; 12-AS-2131 TD ; 12-AS-2140 TD ; 12-AS-2340 TD ; 12-AS-2430 TD ; 12-AS-2540 TD/TO ; 12-AS-2330 TO ; 12-AS-2530 TO ; 12-AS-2740 TO ; 12-AS-2940 TO ; 16-AS-2230 TD ; 16-AS-2601 DD/OD ; 16-AS-2630 TO ; REINFORCED (ratio 1:1,73)
TF4072AMP*	VK4023 + TF4034AMP	12-AS-1800 IT ; 12-AS-1631 TD IT ; 12-AS-1931 TD/TO IT ; 12-AS-2131 TD/TO IT ; 12-AS-2141 TD IT ; 12-AS-2301 TD/TO IT ; 12-AS-2141 TD IT ; 12-AS-2331 TO IT ; 12-AS-2531 TO IT ; 12-AS-251 TO IT ; 12-AS-2741 TO IT ; 12-AS-2941 TO IT ; 16-AS-2200 IT ; 16-AS-2231 TD IT ; 16-AS-2601 TD/TO IT ; 16-AS-2631 TO IT ; REINFORCED (ratio 1:1,73)
TF4073AMP*	VK4001 + TF4035AMP	8-S-151 ; 12-S-2100 ; 12-S-2300 ; 12-S-2800 ; 16-S-151 ; 16-S-181 ; 16-S-221 ; 16-S-1620 TD ; 16-S-1820 TO ; 16-S-1920 TD ; 16-S-2220 TO/TD ; 16-S-2520 TO ; 8-S-1620 TD ; 8-S-1820 TO ; 8-S-220 TO ; 16-S-2320 TD ; 16-S-2330 TD ; 16-S-2720 TO ; 16-S-2730 TO (Z=14) ; REINFORCED (ratio 1:1,56)
TF4074AMP*	VK4002 + TF4035AMP	16-S-130 ; 16-S-160 ; 16-S-190 ; 16-S-220 ; 16-S-112/17,28 ; (trilobe) ; REINFORCED (ratio 1:1,56)
TF4075AMP*	VK4005 + TF4035AMP	16-K-130 ; 16-S-112 ; 16-S-150 ; (trilobe) ; REINFORCED (ratio 1:1,56)
TF4076AMP*	VK4006 + TF4035AMP	16-S-112 A ; 16-S-130 A ; 16-S-160 A ; 16-S-190 A ; 16-S-220 A ; (trilobe) ; REINFORCED (ratio 1:1,56)
TF4077AMP*	VK4007 + TF4035AMP	16-S-151 IT ; 16-S-181 IT ; 16-S-221 IT ; 16-S-1621 TD IT ; 16-S-1821 TO IT ; 16-S-1921 TD IT ; 16-S-2221 TD/TO IT ; 16-S-2321 TD IT ; 16-S-2331 TD IT ; 16-S-2521 TO IT ; 16-S-2721 TO IT ; 16-S-2731 TO IT (Z=14) ; REINFORCED (ratio 1:1,56)
TF4078AMP*	VK4008 + TF4035AMP	16-S251 IT ; 16-S-2720 TO IT (Z=14) ; REINFORCED (ratio 1:1,56)
TF4079AMP*	VK4009 + TF4035AMP	16-S-150 IT ; (trilobe) ; REINFORCED (ratio 1:1,56)
TF4080AMP*	VK4015 + TF4035AMP	5-90 GP ; 5-92 GP ; 4-120 GP ; REINFORCED (ratio 1:1,56)
TF4081AMP*	VK4016 + TF4035AMP	5-110 GPA ; REINFORCED (ratio 1:1,56)
TF4082AMP*	VK4017 + TF4035AMP	5-110 GP ; 5-111 GP ; 4-150 GP ; REINFORCED (ratio 1:1,56)
TF4083AMP*	VK4018 + TF4035AMP	9-S-75/13,16 ; 9-S-75/9,56 ; REINFORCED (ratio 1:1,56)

* ALSO AVAILABLE WITH ELECTRIC/MECHANIC SENSOR ON/OFF

ABER is constantly engaged in improving its products and, therefore, reserves itself the right to modify without any further notice the characteristics shown.

REFERENCE	OBSERVATION	GEAR BOX
TF4084AMP*	VK4019 + TF4035AMP	9-S-109/10,25 ; 9-S-109/10,24 ; 16-S-109/11,86 ; 16-S-109/13,53 ; REINFORCED (ratio 1:1,56)
TF4085AMP*	VK4020 + TF4035AMP	9-S-109/12,92 ; 16-S-109/13,04 ; 16-S-109/13,30 ; 16-S-109/13,42 ; 8-S-109 ; REINFORCED (ratio 1:1,56)
TF4086AMP*	VK4021 + TF4035AMP	9-S-109/12,91 ; 16-S-109/13,31 ; 16-S-109/13,41 ; 9-S-1110 TO/9,48 ; 9-S-1310 TO/9,48 ; REINFORCED (ratio 1:1,56)
TF4087AMP*	VK4022 + TF4035AMP	12-AS-1800 ; 12-AS-2301 ; 16-AS-2200 ; 12-AS-2601 ; 12-AS-1630 TD ; 12-AS-1930 TD/TO ; 12-AS-2130 TD/TO ; 12-AS-2131 TD ; 12-AS-2140 TD ; 12-AS-2340 TD ; 12-AS-2430 TD ; 12-AS-2540 TD/TO ; 12-AS-2330 TO ; 12-AS-2530 TO ; 12-AS-2740 TO ; 12-AS-2940 TO ; 16-AS-2230 TD ; 16-AS-2601 DD/OD ; 16-AS-2630 TO ; REINFORCED (ratio 1:1,56)
TF4088AMP*	VK4023 + TF4035AMP	12-AS-1800 IT ; 12-AS-1631 TD IT ; 12-AS-1931 TD/TO IT ; 12-AS-2131 TD/TO IT ; 12-AS-2141 TD IT ; 12-AS-2301 TD/TO IT ; 12-AS-2341 TD IT ; 12-AS-2431 TD IT ; 12-AS-2331 TO IT ; 12-AS-2531 TO IT ; 12-AS-2541 TO IT ; 12-AS-2741 TO IT ; 12-AS-2941 TO IT ; 16-AS-2200 IT ; 16-AS-2231 TD IT ; 16-AS-2601 TD/TO IT ; 16-AS-2631 TO IT ; REINFORCED (ratio 1:1,56)
TF4089AMP*	VK4001 + TF4036AMP	8-S-151 ; 12-S-2100 ; 12-S-2300 ; 12-S-2800 ; 16-S-151 ; 16-S-181 ; 16-S-221 ; 16-S-1620 TD ; 16-S-1820 TO ; 16-S-1920 TD ; 16-S-2220 TO/TD ; 16-S-2520 TO ; 8-S-1620 TD ; 8-S-1820 TO ; 8-S-220 TO ; 16-S-2320 TD ; 16-S-2330 TD ; 16-S-2720 TO ; 16-S-2730 TO (Z=14) ; REINFORCED (ratio 1:1,35)
TF4090AMP*	VK4002 + TF4036AMP	16-S-130 ; 16-S-160 ; 16-S-190 ; 16-S-220 ; 16-S-112/17,28 ; (trilobe) ; REINFORCED (ratio 1:1,35)
TF4091AMP*	VK4005 + TF4036AMP	16-K-130 ; 16-S-112 ; 16-S-150 ; (trilobe) ; REINFORCED (ratio 1:1,35)
TF4092AMP*	VK4006 + TF4036AMP	16-S-112 A ; 16-S-130 A ; 16-S-160 A ; 16-S-190 A ; 16-S-220 A ; (trilobe) ; REINFORCED (ratio 1:1,35)
TF4093AMP*	VK4007 + TF4036AMP	16-S-151 IT ; 16-S-181 IT ; 16-S-221 IT ; 16-S-1621 TD IT ; 16-S-1821 TD IT ; 16-S-1921 TD IT ; 16-S-2221 TD/TO IT ; 16-S-2321 TD IT ; 16-S-2331 TD IT ; 16-S-2521 TO IT ; 16-S-2721 TO IT ; 16-S-2731 TO IT (Z=14) ; REINFORCED (ratio 1:1,35)
TF4094AMP*	VK4008 + TF4036AMP	16-S251 IT ; 16-S-2720 TO IT (Z=14) ; REINFORCED (ratio 1:1,35)
TF4095AMP*	VK4009 + TF4036AMP	16-S-150 IT ; (trilobe) ; REINFORCED (ratio 1:1,35)
TF4096AMP*	VK4015 + TF4036AMP	5-90 GP ; 5-92 GP ; 4-120 GP ; REINFORCED (ratio 1:1,35)
TF4097AMP*	VK4016 + TF4036AMP	5-110 GPA ; REINFORCED (ratio 1:1,35)
TF4098AMP*	VK4017 + TF4036AMP	5-110 GP ; 5-111 GP ; 4-150 GP ; REINFORCED (ratio 1:1,35)
TF4099AMP*	VK4018 + TF4036AMP	9-S-75/13,16 ; 9-S-75/9,56 ; REINFORCED (ratio 1:1,35)
TF4100AMP*	VK4019 + TF4036AMP	9-S-109/10,25 ; 9-S-109/10,24 ; 16-S-109/11,86 ; 16-S-109/13,53 ; REINFORCED (ratio 1:1,35)
TF4101AMP*	VK4020 + TF4036AMP	9-S-109/12,92 ; 16-S-109/13,04 ; 16-S-109/13,30 ; 16-S-109/13,42 ; 8-S-109 ; REINFORCED (ratio 1:1,35)
TF4102AMP*	VK4021 + TF4036AMP	9-S-109/12,91 ; 16-S-109/13,31 ; 16-S-109/13,41 ; 9-S-1110 TO/9,48 ; 9-S-1310 TO/9,48 ; REINFORCED (ratio 1:1,35)
TF4103AMP*	VK4022 + TF4036AMP	12-AS-1800 ; 12-AS-2301 ; 16-AS-2200 ; 12-AS-2601 ; 12-AS-1630 TD ; 12-AS-1930 TD/TO ; 12-AS-2130 TD/TO ; 12-AS-2131 TD ; 12-AS-2140 TD ; 12-AS-2340 TD ; 12-AS-2430 TD ; 12-AS-2540 TD/TO ; 12-AS-2330 TO ; 12-AS-2530 TO ; 12-AS-2740 TO ; 12-AS-2940 TO ; 16-AS-2230 TD ; 16-AS-2601 DD/OD ; 16-AS-2630 TO ; REINFORCED (ratio 1:1,35)
TF4104AMP*	VK4023 + TF4036AMP	12-AS-1800 IT ; 12-AS-1631 TD IT ; 12-AS-1931 TD/TO IT ; 12-AS-2131 TD/TO IT ; 12-AS-2141 TD IT ; 12-AS-2301 TD/TO IT ; 12-AS-2141 TD IT ; 12-AS-2331 TO IT ; 12-AS-2531 TO IT ; 12-AS-251 TO IT ; 12-AS-2741 TO IT ; 12-AS-2941 TO IT ; 16-AS-2200 IT ; 16-AS-2231 TD IT ; 16-AS-2601 TD/TO IT ; 16-AS-2631 TO IT ; REINFORCED (ratio 1:1,35)
TF4105M*	-	6S-420 ; MO37S6 (left side assembly) ; Mechanic Control
TF4105P*	-	6S-420 ; MO37S6 (left side assembly) ; Pneumatic Control
TF4105V*	-	6S-420 ; MO37S6 (left side assembly) ; Vacuum Control
VK4001	-	Adapter Kit 8-S-151 ; 12-S-2100 ; 12-S-2300 ; 12-S-2800 ; 16-S-151 ; 16-S-181 ; 16-S-221 ; 16-S-1620 TD ; 16-S-1820 TO ; 16-S-1920 TD ; 16-S-2220 TO/TD ; 16-S-2520 TO ; 8-S-1620 TD ; 8-S-1820 TO ; 8-S-220 TO ; 16-S-2320 TD ; 16-S-2330 TD ; 16-S-2720 TO ; 16-S-2720 TO (Z=14)
VK4002	-	Adapter Kit 16-S-130 ; 16-S-160 ; 16-S-190 ; 16-S-220 ; 16-S-112/17,28 ; 8-S-151 ; 16-S-151 ; 16-S-181 ; 16-S-221 ; (trilobe)
VK4005	-	Adapter Kit 16-K-130 ; 16-S-112 ; 16-S-150 ; (trilobe)
VK4006	-	Adapter Kit 16-S-112 A ; 16-S-130 A ; 16-S-160 A ; 16-S-190 A ; 16-S-220 A ; (trilobe)
VK4007	-	Adapter Kit 16-S-151 IT ; 16-S-181 IT ; 16-S-221 IT ; 16-S-1621 TD IT ; 16-S-1821 TO IT ; 16-S-1921 TD IT ; 16-S-2221 TD/TO IT ; 16-S-2321 TD IT ; 16-S-2331 TD IT ; 16-S-2521 TO IT ; 16-S-2721 TO IT ; 16-S-2731 TO IT ; (Z=14)
VK4008	-	Adapter Kit 16-S-251 IT ; 16-S-2720 TO IT ; (Z=14)
VK4009	-	Adapter Kit 16-S-150 IT ; (trilobe)
VK4015	-	Adapter Kit 5 - 90 GP ; 5 - 92 GP ; 4 - 120 GP

* ALSO AVAILABLE WITH ELECTRIC/MECHANIC SENSOR ON/OFF

ABER is constantly engaged in improving its products and, therefore, reserves itself the right to modify without any further notice the characteristics shown.

REFERENCE	OBSERVATION	GEAR BOX
VK4016	-	Adapter Kit 5 - 110 GPA
VK4017	-	Adapter Kit 5 - 110 GP ; 5 - 111 GP ; 4 - 150 GP
VK4018	-	Adapter Kit 9-S-75/13,16 ; 9-S-75/9,56
VK4019	-	Adapter Kit 9-S-109/10,25 ; 9-S-109/10,24 ; 16-S-109/11,86 ; 16-S-109/13,53
VK4020	-	Adapter Kit 9-S-109/12,92 ; 16-S-109/13,04 ; 16-S-109/13,30 ; 16-S-109/13,42 ; 8-S-109
VK4021	-	Adapter Kit 9-S-109/12,91 ; 16-S-109/13,31 ; 16-S-109/13,41 ; 9-S-1110 TO/9,48 ; 9-S-1310 TO/9,48
VK4022	-	Adapter Kit 12-AS-1600 ; 12-AS-2301 ; 16-AS-2200 ; 16-AS-2601 ; 12-AS-1630 TD ; 12-AS-1930 TD/TO ; 12-AS-2130 TD/TO ; 12-AS-2131 TD ; 12-AS-2140 TD ; 12-AS-2340 TD ; 12-AS-2430 TD ; 12-AS-2540 TD ; 12-AS-2330 TO ; 12-AS-2530 TO ; 12-AS-2540 TO ; 12-AS-2740 TO ; 12-AS-2940 TO ; 16-AS-2230 TD ; 16-AS-2601 DD/OD ; 16-AS-2630 TO
VK4023	-	Adapter Kit 12-AS-1800 IT ; 12-AS-1631 TD IT ; 12-AS-1931 TD/TO IT ; 12-AS-2131 TD/TO IT ; 12-AS-211 TD IT ; 12-AS-2301 TD/TO IT ; 12-AS-2341 TD IT ; 12-AS-2431 TD IT ; 12-AS-2331TO IT ; 12-AS-2531 TO IT ; 12-AS-2541 TO IT ; 12-AS-2741 TO IT ; 12-AS-2941 TO IT ; 16-AS-2200 IT ; 16-AS-2231 TD IT ; 16-AS-2601 TD/TO IT ; 16-AS-2631 TO IT

POWER TAKE OFF'S AND ADAPTER KIT'S
VOLVO

REFERENCE	OBSERVATION	GEAR BOX
TF5001AMP*	-	R50 ; R51 ; R52 ; SR52 (ratio 1:1,32)
TF5001SP*	-	R50 ; R51 ; R52 ; SR52 (ratio 1:1)
TF5002AMP*	-	R61 ; MR61 ; SR61 ; R62 ; MR62 ; SR62 ; R60 (ratio 1:1,32)
TF5002SP*	-	R61 ; MR61 ; SR61 ; R62 ; MR62 ; SR62 ; R60 (ratio 1:1)
TF5003AMP*	VK5003 + TF4002AMP	R70 ; SR70 ; SR71 (ratio 1:1,32)
TF5003SP*	VK5003 + TF4002SP	R70 ; SR70 ; SR71 (ratio 1:1)
TF5004AMP*	VK5004 + TF4002AMP	R1000 ; SR1000 ; R1400 ; R1700 ; SR1400 ; SR1700 ; SR1900 ; SR2000 ; SR2400 ; SRO2400 ; VT1708 ; VT2009B ; VT2014B ; VT2214 ; VT2412B ; VT2514B ; VTO2214B ; VTO2514B ; VT2814B ; VTO2814B (ratio 1:1,32)
TF5004SP*	VK5004 + TF4002SP	R1000 ; SR1000 ; R1400 ; R1700 ; SR1400 ; SR1700 ; SR1900 ; SR2000 ; SR2400 ; SRO2400 ; VT1708 ; VT2009B ; VT2014B ; VT2214 ; VT2412B ; VT2514B ; VTO2214B ; VTO2514B ; VT2814B ; VTO2814B (ratio 1:1)
TF5005AMP*	VK5005 + TF4002AMP	R1000 IT ; SR1000 IT ; R1400 IT ; R1700 IT ; SR1400 IT ; SR1700 IT ; SR1900 IT ; SR2000 IT ; SR2400 IT ; SRO2400 IT ; VT1708 IT ; VT2009B IT ; VT2014B IT ; VT2214 IT ; VT2412B IT ; VT2514B IT ; VTO2214B IT ; VTO2514B IT ; VT2814B IT ; VTO2B14B IT (ratio 1:1,32)
TF5005SP*	VK5005 + TF4002SP	R1000 IT ; SR1000 IT ; R1400 IT ; R1700 IT ; SR1400 IT ; SR1700 IT ; SR1900 IT ; SR2000 IT ; SR2400 IT ; SRO2400 IT ; VT1708 IT ; VT2009B IT ; VT2014B IT ; VT2214 IT ; VT2412B IT ; VT2514B IT ; VTO2214B IT ; VTO2514B IT ; VT2814B IT ; VTO2B14B IT (ratio 1:1)
TF5006AMP*	VK5004 + TF4033AMP	R1000 SR1000 ; R1400 ; R1700 ; SR1400 ; SR1700 ; SR1900 ; SR2000 ; SR2400 ; SRO2400 ; VT1708 ; VT2009B ; VT2014B ; VT2214 ; VT2412B ; VT2514B ; VTO2214B ; VTO2514B ; VT2814B ; VTO2814B ; REINFORCED (ratio 1:1)
TF5007AMP*	VK5005 + TF4033AMP	R1000IT ; SR1000 IT ; R1400 IT ; R1700 IT ; SR1400 IT ; SR1700 IT ; SR1900IT ; SR2000 IT ; SR2400 IT ; SRO2400 IT ; VT1708 IT ; VT2009B IT ; VT2014B IT ; VT2214 IT ; VT2412B IT ; VT2514B IT ; VTO2214B IT ; VTO2514B IT ; VT2B14B IT ; VTO2814B IT ; REINFORCED (ratio 1:1)
TF5008AMP*	VK5004 + TF4034AMP	R1000 SR1000 ; R1400 ; R1700 ; SR1400 ; SR1700 ; SR1900 ; SR2000 ; SR2400 ; SRO2400 ; VT1708 ; VT2009B ; VT2014B ; VT2214 ; VT2412B ; VT2514B ; VTO2214B ; VTO2514B ; VT2814B ; VTO2814B ; REINFORCED (ratio 1:1,73)

* ALSO AVAILABLE WITH ELECTRIC/MECHANIC SENSOR ON/OFF

ABER is constantly engaged in improving its products and, therefore, reserves itself the right to modify, without any further notice the characteristics shown.

REFERENCE	OBSERVATION	GEAR BOX
TF5009AMP*	VK5005 + TF4034AMP	R1000 IT ; SR1000 IT ; R1400 IT ; R1700 IT ; SR1400 IT ; SR1700 IT ; SR1900 IT ; SR2000 IT ; SR2400 IT ; SRO2400 IT ; VT1708 IT ; VT2009B IT ; VT2014B IT ; VT2214 IT ; VT 2412B IT ; VT2514B IT ; VTO2214B IT ; VTO2514B IT ; VT2814B IT ; VTO2814B IT ; REINFORCED (ratio 1:1,73)
TF5010AMP*	VK5004 + TF4035AMP	R1000 ; SR1000 ; R1400 ; R1700 ; SR1400 ; SR1700 ; SR9100 ; SR2000 ; SR2400 ; SRO2400 ; VT1708 ; VT2009B ; VT2014B ; VT2214 ; VT2412B ; VT2514B ; VTO2214B ; VTO2514B ; VT2814B ; VTO2814B ; REINFORCED (ratio 1:1,56)
TF5011AMP*	VK5005 + TF4035AMP	R1000 IT ; SR1000 IT ; R1400 IT ; R1700 IT ; SR1400 IT ; SR1700 IT ; SR1900 IT ; SR2000 IT ; SR2400 IT ; SRO2400 IT ; VT1708 IT ; VT2009B IT ; VT2014B IT ; VT2214 IT ; VT2412B IT ; VT2514B IT ; VTO2214B IT ; VTO2514B IT ; VT2814B IT ; VTO2814B IT ; REINFORCED (ratio 1:1,56)
TF5012AMP*	VK5004 + TF4036AMP	R1000 ; SR1000 ; R1400 ; R1700 ; SR1400 ; SR1700 ; SR1900 ; SR2000 ; SR2400 ; SRO2400 ; VT1708 ; VT2009B ; VT2014B ; VT2214 ; VT2412B ; VT2514B ; VTO2214B ; VTO2514B ; VT2814B ; VTO2814B ; REINFORCED (ratio 1:1,35)
TF5013AMP*	VK5005 + TF4036AMP	R1000 IT ; SR1000 IT ; R1400 IT ; R1700 IT ; SR1400 IT ; SR1700 IT ; SR1900 IT ; SR2000 IT ; SR2400 IT ; SRO2400 IT ; VT1708 IT ; VT2009B IT ; VT2014B IT ; VT2214 IT ; VT2412B IT ; VT2514B IT ; VTO2214B IT ; VTO2514B IT ; VT2814B IT ; VTO2814B IT ; REINFORCED (ratio 1:1,35)
TF5015AMP*	VK5006 + TF4002AMP	AT2412C ; AT2412AT ; AT2512C ; AT2514 ; AT2515C ; AT2812C ; ATO2512C ; ATO3112C (ratio 1:1,32)
TF5015SP*	VK5006 + TF4002SP	AT2412C ; AT2412AT ; AT2512C ; AT2514 ; AT2515C ; AT2812C ; ATO2512C ; ATO3112C (ratio 1:1)
TF5016AMP*	VK5006 + TF4033AMP	AT2412C ; AT2412AT ; AT2512C ; AT2514 ; AT2515C ; AT2812C ; ATO2512C ; ATO3112C REINFORCED (ratio 1:1)
TF5017AMP*	VK5006 + TF4034AMP	AT2412C ; AT2412AT ; AT2512C ; AT2514 ; AT2515C ; AT2812C ; ATO2512C ; ATO3112C REINFORCED (ratio 1:1,73)
TF5018AMP*	VK5006 + TF4035AMP	AT2412C ; AT2412AT ; AT2512C ; AT2514 ; AT2515C ; AT2812C ; ATO2512C ; ATO3112C REINFORCED (ratio 1:1,56)
TF5019AMP*	VK5006 + TF4036AMP	AT2412C ; AT2412AT ; AT2512C ; AT2514 ; AT2515C ; AT2812C ; ATO2512C ; ATO3112C REINFORCED (ratio 1:1,35)
VK5003	-	Adapter Kit R70 ; SR70 ; SR71
VK5004	-	Adapter Kit R1000 ; SR1000 ; R1400 ; R1700 ; SR1400 ; SR1700 ; SR1900 ; SR2000 ; SR2400 ; SR02400 ; VT1708 ; VT2009B ; VT2014B ; VT2214 ; VT2412B ; VT2514B ; VTO2214B ; VTO2514B ; VT 2814B ; VTO2814B
VK5005	-	Adapter Kit R1000 IT ; SR1000 IT ; R1400 IT ; R1700 IT ; SR1400 IT ; SR 700 IT ; SR1900 IT ; SR2000 IT ; SR2400 IT ; SR02400 IT ; VT1708 IT ; VT2009B IT ; VT2014B IT ; VT2214 IT ; VT2412B IT ; VT2514B IT ; VTO2214B IT ; VTO2514B IT ; VT2814B IT ; VTO2814B IT
VK5006	-	Adapter Kit AT2412C ; AT2412AT ; AT2512C ; AT2514 ; AT2515C ; AT2812C ; ATO2512C ; ATO3112C

POWER TAKE OFF'S
MAN | VW

REFERENCE	OBSERVATION	GEAR BOX
TF6001AMP*	-	007.1 (ratio 1:1,32)
TF6001SP*	-	007.1 (ratio 1:1)

* ALSO AVAILABLE WITH ELECTRIC/MECHANIC SENSOR ON/OFF

ABER is constantly engaged in improving its products and, therefore, reserves itself the right to modify without any further notice the characteristics shown.

REFERENCE	OBSERVATION	GEAR BOX
TF4084AMP*	VK4019 + TF4035AMP	9-S-109/10,25 ; 9-S-109/10,24 ; 16-S-109/11,86 ; 16-S-109/13,53 ; REINFORCED (ratio 1:1,56)
TF4085AMP*	VK4020 + TF4035AMP	9-S-109/12,92 ; 16-S-109/13,04 ; 16-S-109/13,30 ; 16-S-109/13,42 ; 8-S-109 ; REINFORCED (ratio 1:1,56)
TF4086AMP*	VK4021 + TF4035AMP	9-S-109/12,91 ; 16-S-109/13,31 ; 16-S-109/13,41 ; 9-S-1110 TO/9,48 ; 9-S-1310 TO/9,48 ; REINFORCED (ratio 1:1,56)
TF4087AMP*	VK4022 + TF4035AMP	12-AS-1800 ; 12-AS-2301 ; 16-AS-2200 ; 12-AS-2601 ; 12-AS-1630 TD ; 12-AS-1930 TD/TO ; 12-AS-2130 TD/TO ; 12-AS-2131 TD ; 12-AS-2140 TD ; 12-AS-2340 TD ; 12-AS-2430 TD ; 12-AS-2540 TD/TO ; 12-AS-2330 TO ; 12-AS-2530 TO ; 12-AS-2740 TO ; 12-AS-2940 TO ; 16-AS-2230 TD ; 16-AS-2601 DD/OD ; 16-AS-2630 TO ; REINFORCED (ratio 1:1,56)
TF4088AMP*	VK4023 + TF4035AMP	12-AS-1800 IT ; 12-AS-1631 TD IT ; 12-AS-1931 TD/TO IT ; 12-AS-2131 TD/TO IT ; 12-AS-2141 TD IT ; 12-AS-2301 TD/TO IT ; 12-AS-2341 TD IT ; 12-AS-2431 TD IT ; 12-AS-2331 TO IT ; 12-AS-2531 TO IT ; 12-AS-2541 TO IT ; 12-AS-2741 TO IT ; 12-AS-2941 TO IT ; 16-AS-2200 IT ; 16-AS-2231 TD IT ; 16-AS-2601 TD/TO IT ; 16-AS-2631 TO IT ; REINFORCED (ratio 1:1,56)
TF4089AMP*	VK4001 + TF4036AMP	8-S-151 ; 12-S-2100 ; 12-S-2300 ; 12-S-2800 ; 16-S-151 ; 16-S-181 ; 16-S-221 ; 16-S-1620 TD ; 16-S-1820 TO ; 16-S-1920 TD ; 16-S-2220 TO/TD ; 16-S-2520 TO ; 8-S-1620 TD ; 8-S-1820 TO ; 8-S-220 TO ; 16-S-2320 TD ; 16-S-2330 TD ; 16-S-2720 TO ; 16-S-2730 TO (Z=14) ; REINFORCED (ratio 1:1,35)
TF4090AMP*	VK4002 + TF4036AMP	16-S-130 ; 16-S-160 ; 16-S-190 ; 16-S-220 ; 16-S-112/17,28 ; (trilobe) ; REINFORCED (ratio 1:1,35)
TF4091AMP*	VK4005 + TF4036AMP	16-K-130 ; 16-S-112 ; 16-S-150 ; (trilobe) ; REINFORCED (ratio 1:1,35)
TF4092AMP*	VK4006 + TF4036AMP	16-S-112 A ; 16-S-130 A ; 16-S-160 A ; 16-S-190 A ; 16-S-220 A ; (trilobe) ; REINFORCED (ratio 1:1,35)
TF4093AMP*	VK4007 + TF4036AMP	16-S-151 IT ; 16-S-181 IT ; 16-S-221 IT ; 16-S-1621 TD IT ; 16-S-1821 TD IT ; 16-S-1921 TD IT ; 16-S-2221 TD/TO IT ; 16-S-2321 TD IT ; 16-S-2331 TD IT ; 16-S-2521 TO IT ; 16-S-2721 TO IT ; 16-S-2731 TO IT (Z=14) ; REINFORCED (ratio 1:1,35)
TF4094AMP*	VK4008 + TF4036AMP	16-S251 IT ; 16-S-2720 TO IT (Z=14) ; REINFORCED (ratio 1:1,35)
TF4095AMP*	VK4009 + TF4036AMP	16-S-150 IT ; (trilobe) ; REINFORCED (ratio 1:1,35)
TF4096AMP*	VK4015 + TF4036AMP	5-90 GP ; 5-92 GP ; 4-120 GP ; REINFORCED (ratio 1:1,35)
TF4097AMP*	VK4016 + TF4036AMP	5-110 GPA ; REINFORCED (ratio 1:1,35)
TF4098AMP*	VK4017 + TF4036AMP	5-110 GP ; 5-111 GP ; 4-150 GP ; REINFORCED (ratio 1:1,35)
TF4099AMP*	VK4018 + TF4036AMP	9-S-75/13,16 ; 9-S-75/9,56 ; REINFORCED (ratio 1:1,35)
TF4100AMP*	VK4019 + TF4036AMP	9-S-109/10,25 ; 9-S-109/10,24 ; 16-S-109/11,86 ; 16-S-109/13,53 ; REINFORCED (ratio 1:1,35)
TF4101AMP*	VK4020 + TF4036AMP	9-S-109/12,92 ; 16-S-109/13,04 ; 16-S-109/13,30 ; 16-S-109/13,42 ; 8-S-109 ; REINFORCED (ratio 1:1,35)
TF4102AMP*	VK4021 + TF4036AMP	9-S-109/12,91 ; 16-S-109/13,31 ; 16-S-109/13,41 ; 9-S-1110 TO/9,48 ; 9-S-1310 TO/9,48 ; REINFORCED (ratio 1:1,35)
TF4103AMP*	VK4022 + TF4036AMP	12-AS-1800 ; 12-AS-2301 ; 16-AS-2200 ; 12-AS-2601 ; 12-AS-1630 TD ; 12-AS-1930 TD/TO ; 12-AS-2130 TD/TO ; 12-AS-2131 TD ; 12-AS-2140 TD ; 12-AS-2340 TD ; 12-AS-2430 TD ; 12-AS-2540 TD/TO ; 12-AS-2330 TO ; 12-AS-2530 TO ; 12-AS-2740 TO ; 12-AS-2940 TO ; 16-AS-2230 TD ; 16-AS-2601 DD/OD ; 16-AS-2630 TO ; REINFORCED (ratio 1:1,35)
TF4104AMP*	VK4023 + TF4036AMP	12-AS-1800 IT ; 12-AS-1631 TD IT ; 12-AS-1931 TD/TO IT ; 12-AS-2131 TD/TO IT ; 12-AS-2141 TD IT ; 12-AS-2301 TD/TO IT ; 12-AS-2141 TD IT ; 12-AS-2331 TO IT ; 12-AS-2531 TO IT ; 12-AS-251 TO IT ; 12-AS-2741 TO IT ; 12-AS-2941 TO IT ; 16-AS-2200 IT ; 16-AS-2231 TD IT ; 16-AS-2601 TD/TO IT ; 16-AS-2631 TO IT ; REINFORCED (ratio 1:1,35)
TF4105M*	-	6S-420 ; MO37S6 (left side assembly) ; Mechanic Control
TF4105P*	-	6S-420 ; MO37S6 (left side assembly) ; Pneumatic Control
TF4105V*	-	6S-420 ; MO37S6 (left side assembly) ; Vacuum Control
VK4001	-	Adapter Kit 8-S-151 ; 12-S-2100 ; 12-S-2300 ; 12-S-2800 ; 16-S-151 ; 16-S-181 ; 16-S-221 ; 16-S-1620 TD ; 16-S-1820 TO ; 16-S-1920 TD ; 16-S-2220 TO/TD ; 16-S-2520 TO ; 8-S-1620 TD ; 8-S-1820 TO ; 8-S-220 TO ; 16-S-2320 TD ; 16-S-2330 TD ; 16-S-2720 TO ; 16-S-2720 TO (Z=14)
VK4002	-	Adapter Kit 16-S-130 ; 16-S-160 ; 16-S-190 ; 16-S-220 ; 16-S-112/17,28 ; 8-S-151 ; 16-S-151 ; 16-S-181 ; 16-S-221 ; (trilobe)
VK4005	-	Adapter Kit 16-K-130 ; 16-S-112 ; 16-S-150 ; (trilobe)
VK4006	-	Adapter Kit 16-S-112 A ; 16-S-130 A ; 16-S-160 A ; 16-S-190 A ; 16-S-220 A ; (trilobe)
VK4007	-	Adapter Kit 16-S-151 IT ; 16-S-181 IT ; 16-S-221 IT ; 16-S-1621 TD IT ; 16-S-1821 TO IT ; 16-S-1921 TD IT ; 16-S-2221 TD/TO IT ; 16-S-2321 TD IT ; 16-S-2331 TD IT ; 16-S-2521 TO IT ; 16-S-2721 TO IT ; 16-S-2731 TO IT ; (Z=14)
VK4008	-	Adapter Kit 16-S-251 IT ; 16-S-2720 TO IT ; (Z=14)
VK4009	-	Adapter Kit 16-S-150 IT ; (trilobe)
VK4015	-	Adapter Kit 5 - 90 GP ; 5 - 92 GP ; 4 - 120 GP

* ALSO AVAILABLE WITH ELECTRIC/MECHANIC SENSOR ON/OFF

ABER is constantly engaged in improving its products and, therefore, reserves itself the right to modify without any further notice the characteristics shown.

REFERENCE	OBSERVATION	GEAR BOX
VK4016	-	Adapter Kit 5 - 110 GPA
VK4017	-	Adapter Kit 5 - 110 GP ; 5 - 111 GP ; 4 - 150 GP
VK4018	-	Adapter Kit 9-S-75/13,16 ; 9-S-75/9,56
VK4019	-	Adapter Kit 9-S-109/10,25 ; 9-S-109/10,24 ; 16-S-109/11,86 ; 16-S-109/13,53
VK4020	-	Adapter Kit 9-S-109/12,92 ; 16-S-109/13,04 ; 16-S-109/13,30 ; 16-S-109/13,42 ; 8-S-109
VK4021	-	Adapter Kit 9-S-109/12,91 ; 16-S-109/13,31 ; 16-S-109/13,41 ; 9-S-1110 TO/9,48 ; 9-S-1310 TO/9,48
VK4022	-	Adapter Kit 12-AS-1600 ; 12-AS-2301 ; 16-AS-2200 ; 16-AS-2601 ; 12-AS-1630 TD ; 12-AS-1930 TD/TO ; 12-AS-2130 TD/TO ; 12-AS-2131 TD ; 12-AS-2140 TD ; 12-AS-2340 TD ; 12-AS-2430 TD ; 12-AS-2540 TD ; 12-AS-2330 TO ; 12-AS-2530 TO ; 12-AS-2540 TO ; 12-AS-2740 TO ; 12-AS-2940 TO ; 16-AS-2230 TD ; 16-AS-2601 DD/OD ; 16-AS-2630 TO
VK4023	-	Adapter Kit 12-AS-1800 IT ; 12-AS-1631 TD IT ; 12-AS-1931 TD/TO IT ; 12-AS-2131 TD/TO IT ; 12-AS-211 TD IT ; 12-AS-2301 TD/TO IT ; 12-AS-2341 TD IT ; 12-AS-2431 TD IT ; 12-AS-2331TO IT ; 12-AS-2531 TO IT ; 12-AS-2541 TO IT ; 12-AS-2741 TO IT ; 12-AS-2941 TO IT ; 16-AS-2200 IT ; 16-AS-2231 TD IT ; 16-AS-2601 TD/TO IT ; 16-AS-2631 TO IT

POWER TAKE OFF'S AND ADAPTER KIT'S
VOLVO

REFERENCE	OBSERVATION	GEAR BOX
TF5001AMP*	-	R50 ; R51 ; R52 ; SR52 (ratio 1:1,32)
TF5001SP*	-	R50 ; R51 ; R52 ; SR52 (ratio 1:1)
TF5002AMP*	-	R61 ; MR61 ; SR61 ; R62 ; MR62 ; SR62 ; R60 (ratio 1:1,32)
TF5002SP*	-	R61 ; MR61 ; SR61 ; R62 ; MR62 ; SR62 ; R60 (ratio 1:1)
TF5003AMP*	VK5003 + TF4002AMP	R70 ; SR70 ; SR71 (ratio 1:1,32)
TF5003SP*	VK5003 + TF4002SP	R70 ; SR70 ; SR71 (ratio 1:1)
TF5004AMP*	VK5004 + TF4002AMP	R1000 ; SR1000 ; R1400 ; R1700 ; SR1400 ; SR1700 ; SR1900 ; SR2000 ; SR2400 ; SRO2400 ; VT1708 ; VT2009B ; VT2014B ; VT2214 ; VT2412B ; VT2514B ; VTO2214B ; VTO2514B ; VT2814B ; VTO2814B (ratio 1:1,32)
TF5004SP*	VK5004 + TF4002SP	R1000 ; SR1000 ; R1400 ; R1700 ; SR1400 ; SR1700 ; SR1900 ; SR2000 ; SR2400 ; SRO2400 ; VT1708 ; VT2009B ; VT2014B ; VT2214 ; VT2412B ; VT2514B ; VTO2214B ; VTO2514B ; VT2814B ; VTO2814B (ratio 1:1)
TF5005AMP*	VK5005 + TF4002AMP	R1000 IT ; SR1000 IT ; R1400 IT ; R1700 IT ; SR1400 IT ; SR1700 IT ; SR1900 IT ; SR2000 IT ; SR2400 IT ; SRO2400 IT ; VT1708 IT ; VT2009B IT ; VT2014B IT ; VT2214 IT ; VT2412B IT ; VT2514B IT ; VTO2214B IT ; VTO2514B IT ; VT2814B IT ; VTO2B14B IT (ratio 1:1,32)
TF5005SP*	VK5005 + TF4002SP	R1000 IT ; SR1000 IT ; R1400 IT ; R1700 IT ; SR1400 IT ; SR1700 IT ; SR1900 IT ; SR2000 IT ; SR2400 IT ; SRO2400 IT ; VT1708 IT ; VT2009B IT ; VT2014B IT ; VT2214 IT ; VT2412B IT ; VT2514B IT ; VTO2214B IT ; VTO2514B IT ; VT2814B IT ; VTO2B14B IT (ratio 1:1)
TF5006AMP*	VK5004 + TF4033AMP	R1000 SR1000 ; R1400 ; R1700 ; SR1400 ; SR1700 ; SR1900 ; SR2000 ; SR2400 ; SRO2400 ; VT1708 ; VT2009B ; VT2014B ; VT2214 ; VT2412B ; VT2514B ; VTO2214B ; VTO2514B ; VT2814B ; VTO2814B ; REINFORCED (ratio 1:1)
TF5007AMP*	VK5005 + TF4033AMP	R1000IT ; SR1000 IT ; R1400 IT ; R1700 IT ; SR1400 IT ; SR1700 IT ; SR1900IT ; SR2000 IT ; SR2400 IT ; SRO2400 IT ; VT1708 IT ; VT2009B IT ; VT2014B IT ; VT2214 IT ; VT2412B IT ; VT2514B IT ; VTO2214B IT ; VTO2514B IT ; VT2B14B IT ; VTO2814B IT ; REINFORCED (ratio 1:1)
TF5008AMP*	VK5004 + TF4034AMP	R1000 SR1000 ; R1400 ; R1700 ; SR1400 ; SR1700 ; SR1900 ; SR2000 ; SR2400 ; SRO2400 ; VT1708 ; VT2009B ; VT2014B ; VT2214 ; VT2412B ; VT2514B ; VTO2214B ; VTO2514B ; VT2814B ; VTO2814B ; REINFORCED (ratio 1:1,73)

* ALSO AVAILABLE WITH ELECTRIC/MECHANIC SENSOR ON/OFF

ABER is constantly engaged in improving its products and, therefore, reserves itself the right to modify, without any further notice the characteristics shown.

REFERENCE	OBSERVATION	GEAR BOX
TF4084AMP*	VK4019 + TF4035AMP	9-S-109/10,25 ; 9-S-109/10,24 ; 16-S-109/11,86 ; 16-S-109/13,53 ; REINFORCED (ratio 1:1,56)
TF4085AMP*	VK4020 + TF4035AMP	9-S-109/12,92 ; 16-S-109/13,04 ; 16-S-109/13,30 ; 16-S-109/13,42 ; 8-S-109 ; REINFORCED (ratio 1:1,56)
TF4086AMP*	VK4021 + TF4035AMP	9-S-109/12,91 ; 16-S-109/13,31 ; 16-S-109/13,41 ; 9-S-1110 TO/9,48 ; 9-S-1310 TO/9,48 ; REINFORCED (ratio 1:1,56)
TF4087AMP*	VK4022 + TF4035AMP	12-AS-1800 ; 12-AS-2301 ; 16-AS-2200 ; 12-AS-2601 ; 12-AS-1630 TD ; 12-AS-1930 TD/TO ; 12-AS-2130 TD/TO ; 12-AS-2131 TD ; 12-AS-2140 TD ; 12-AS-2340 TD ; 12-AS-2430 TD ; 12-AS-2540 TD/TO ; 12-AS-2330 TO ; 12-AS-2530 TO ; 12-AS-2740 TO ; 12-AS-2940 TO ; 16-AS-2230 TD ; 16-AS-2601 DD/OD ; 16-AS-2630 TO ; REINFORCED (ratio 1:1,56)
TF4088AMP*	VK4023 + TF4035AMP	12-AS-1800 IT ; 12-AS-1631 TD IT ; 12-AS-1931 TD/TO IT ; 12-AS-2131 TD/TO IT ; 12-AS-2141 TD IT ; 12-AS-2301 TD/TO IT ; 12-AS-2341 TD IT ; 12-AS-2431 TD IT ; 12-AS-2331 TO IT ; 12-AS-2531 TO IT ; 12-AS-2541 TO IT ; 12-AS-2741 TO IT ; 12-AS-2941 TO IT ; 16-AS-2200 IT ; 16-AS-2231 TD IT ; 16-AS-2601 TD/TO IT ; 16-AS-2631 TO IT ; REINFORCED (ratio 1:1,56)
TF4089AMP*	VK4001 + TF4036AMP	8-S-151 ; 12-S-2100 ; 12-S-2300 ; 12-S-2800 ; 16-S-151 ; 16-S-181 ; 16-S-221 ; 16-S-1620 TD ; 16-S-1820 TO ; 16-S-1920 TD ; 16-S-2220 TO/TD ; 16-S-2520 TO ; 8-S-1620 TD ; 8-S-1820 TO ; 8-S-220 TO ; 16-S-2320 TD ; 16-S-2330 TD ; 16-S-2720 TO ; 16-S-2730 TO (Z=14) ; REINFORCED (ratio 1:1,35)
TF4090AMP*	VK4002 + TF4036AMP	16-S-130 ; 16-S-160 ; 16-S-190 ; 16-S-220 ; 16-S-112/17,28 ; (trilobe) ; REINFORCED (ratio 1:1,35)
TF4091AMP*	VK4005 + TF4036AMP	16-K-130 ; 16-S-112 ; 16-S-150 ; (trilobe) ; REINFORCED (ratio 1:1,35)
TF4092AMP*	VK4006 + TF4036AMP	16-S-112 A ; 16-S-130 A ; 16-S-160 A ; 16-S-190 A ; 16-S-220 A ; (trilobe) ; REINFORCED (ratio 1:1,35)
TF4093AMP*	VK4007 + TF4036AMP	16-S-151 IT ; 16-S-181 IT ; 16-S-221 IT ; 16-S-1621 TD IT ; 16-S-1821 TD IT ; 16-S-1921 TD IT ; 16-S-2221 TD/TO IT ; 16-S-2321 TD IT ; 16-S-2331 TD IT ; 16-S-2521 TO IT ; 16-S-2721 TO IT ; 16-S-2731 TO IT (Z=14) ; REINFORCED (ratio 1:1,35)
TF4094AMP*	VK4008 + TF4036AMP	16-S251 IT ; 16-S-2720 TO IT (Z=14) ; REINFORCED (ratio 1:1,35)
TF4095AMP*	VK4009 + TF4036AMP	16-S-150 IT ; (trilobe) ; REINFORCED (ratio 1:1,35)
TF4096AMP*	VK4015 + TF4036AMP	5-90 GP ; 5-92 GP ; 4-120 GP ; REINFORCED (ratio 1:1,35)
TF4097AMP*	VK4016 + TF4036AMP	5-110 GPA ; REINFORCED (ratio 1:1,35)
TF4098AMP*	VK4017 + TF4036AMP	5-110 GP ; 5-111 GP ; 4-150 GP ; REINFORCED (ratio 1:1,35)
TF4099AMP*	VK4018 + TF4036AMP	9-S-75/13,16 ; 9-S-75/9,56 ; REINFORCED (ratio 1:1,35)
TF4100AMP*	VK4019 + TF4036AMP	9-S-109/10,25 ; 9-S-109/10,24 ; 16-S-109/11,86 ; 16-S-109/13,53 ; REINFORCED (ratio 1:1,35)
TF4101AMP*	VK4020 + TF4036AMP	9-S-109/12,92 ; 16-S-109/13,04 ; 16-S-109/13,30 ; 16-S-109/13,42 ; 8-S-109 ; REINFORCED (ratio 1:1,35)
TF4102AMP*	VK4021 + TF4036AMP	9-S-109/12,91 ; 16-S-109/13,31 ; 16-S-109/13,41 ; 9-S-1110 TO/9,48 ; 9-S-1310 TO/9,48 ; REINFORCED (ratio 1:1,35)
TF4103AMP*	VK4022 + TF4036AMP	12-AS-1800 ; 12-AS-2301 ; 16-AS-2200 ; 12-AS-2601 ; 12-AS-1630 TD ; 12-AS-1930 TD/TO ; 12-AS-2130 TD/TO ; 12-AS-2131 TD ; 12-AS-2140 TD ; 12-AS-2340 TD ; 12-AS-2430 TD ; 12-AS-2540 TD/TO ; 12-AS-2330 TO ; 12-AS-2530 TO ; 12-AS-2740 TO ; 12-AS-2940 TO ; 16-AS-2230 TD ; 16-AS-2601 DD/OD ; 16-AS-2630 TO ; REINFORCED (ratio 1:1,35)
TF4104AMP*	VK4023 + TF4036AMP	12-AS-1800 IT ; 12-AS-1631 TD IT ; 12-AS-1931 TD/TO IT ; 12-AS-2131 TD/TO IT ; 12-AS-2141 TD IT ; 12-AS-2301 TD/TO IT ; 12-AS-2141 TD IT ; 12-AS-2331 TO IT ; 12-AS-2531 TO IT ; 12-AS-251 TO IT ; 12-AS-2741 TO IT ; 12-AS-2941 TO IT ; 16-AS-2200 IT ; 16-AS-2231 TD IT ; 16-AS-2601 TD/TO IT ; 16-AS-2631 TO IT ; REINFORCED (ratio 1:1,35)
TF4105M*	-	6S-420 ; MO37S6 (left side assembly) ; Mechanic Control
TF4105P*	-	6S-420 ; MO37S6 (left side assembly) ; Pneumatic Control
TF4105V*	-	6S-420 ; MO37S6 (left side assembly) ; Vacuum Control
VK4001	-	Adapter Kit 8-S-151 ; 12-S-2100 ; 12-S-2300 ; 12-S-2800 ; 16-S-151 ; 16-S-181 ; 16-S-221 ; 16-S-1620 TD ; 16-S-1820 TO ; 16-S-1920 TD ; 16-S-2220 TO/TD ; 16-S-2520 TO ; 8-S-1620 TD ; 8-S-1820 TO ; 8-S-220 TO ; 16-S-2320 TD ; 16-S-2330 TD ; 16-S-2720 TO ; 16-S-2720 TO (Z=14)
VK4002	-	Adapter Kit 16-S-130 ; 16-S-160 ; 16-S-190 ; 16-S-220 ; 16-S-112/17,28 ; 8-S-151 ; 16-S-151 ; 16-S-181 ; 16-S-221 ; (trilobe)
VK4005	-	Adapter Kit 16-K-130 ; 16-S-112 ; 16-S-150 ; (trilobe)
VK4006	-	Adapter Kit 16-S-112 A ; 16-S-130 A ; 16-S-160 A ; 16-S-190 A ; 16-S-220 A ; (trilobe)
VK4007	-	Adapter Kit 16-S-151 IT ; 16-S-181 IT ; 16-S-221 IT ; 16-S-1621 TD IT ; 16-S-1821 TO IT ; 16-S-1921 TD IT ; 16-S-2221 TD/TO IT ; 16-S-2321 TD IT ; 16-S-2331 TD IT ; 16-S-2521 TO IT ; 16-S-2721 TO IT ; 16-S-2731 TO IT ; (Z=14)
VK4008	-	Adapter Kit 16-S-251 IT ; 16-S-2720 TO IT ; (Z=14)
VK4009	-	Adapter Kit 16-S-150 IT ; (trilobe)
VK4015	-	Adapter Kit 5 - 90 GP ; 5 - 92 GP ; 4 - 120 GP

* ALSO AVAILABLE WITH ELECTRIC/MECHANIC SENSOR ON/OFF

ABER is constantly engaged in improving its products and, therefore, reserves itself the right to modify without any further notice the characteristics shown.

REFERENCE	OBSERVATION	GEAR BOX
VK4016	-	Adapter Kit 5 - 110 GPA
VK4017	-	Adapter Kit 5 - 110 GP ; 5 - 111 GP ; 4 - 150 GP
VK4018	-	Adapter Kit 9-S-75/13,16 ; 9-S-75/9,56
VK4019	-	Adapter Kit 9-S-109/10,25 ; 9-S-109/10,24 ; 16-S-109/11,86 ; 16-S-109/13,53
VK4020	-	Adapter Kit 9-S-109/12,92 ; 16-S-109/13,04 ; 16-S-109/13,30 ; 16-S-109/13,42 ; 8-S-109
VK4021	-	Adapter Kit 9-S-109/12,91 ; 16-S-109/13,31 ; 16-S-109/13,41 ; 9-S-1110 TO/9,48 ; 9-S-1310 TO/9,48
VK4022	-	Adapter Kit 12-AS-1600 ; 12-AS-2301 ; 16-AS-2200 ; 16-AS-2601 ; 12-AS-1630 TD ; 12-AS-1930 TD/TO ; 12-AS-2130 TD/TO ; 12-AS-2131 TD ; 12-AS-2140 TD ; 12-AS-2340 TD ; 12-AS-2430 TD ; 12-AS-2540 TD ; 12-AS-2330 TO ; 12-AS-2530 TO ; 12-AS-2540 TO ; 12-AS-2740 TO ; 12-AS-2940 TO ; 16-AS-2230 TD ; 16-AS-2601 DD/OD ; 16-AS-2630 TO
VK4023	-	Adapter Kit 12-AS-1800 IT ; 12-AS-1631 TD IT ; 12-AS-1931 TD/TO IT ; 12-AS-2131 TD/TO IT ; 12-AS-211 TD IT ; 12-AS-2301 TD/TO IT ; 12-AS-2341 TD IT ; 12-AS-2431 TD IT ; 12-AS-2331TO IT ; 12-AS-2531 TO IT ; 12-AS-2541 TO IT ; 12-AS-2741 TO IT ; 12-AS-2941 TO IT ; 16-AS-2200 IT ; 16-AS-2231 TD IT ; 16-AS-2601 TD/TO IT ; 16-AS-2631 TO IT

POWER TAKE OFF'S AND ADAPTER KIT'S
VOLVO

REFERENCE	OBSERVATION	GEAR BOX
TF5001AMP*	-	R50 ; R51 ; R52 ; SR52 (ratio 1:1,32)
TF5001SP*	-	R50 ; R51 ; R52 ; SR52 (ratio 1:1)
TF5002AMP*	-	R61 ; MR61 ; SR61 ; R62 ; MR62 ; SR62 ; R60 (ratio 1:1,32)
TF5002SP*	-	R61 ; MR61 ; SR61 ; R62 ; MR62 ; SR62 ; R60 (ratio 1:1)
TF5003AMP*	VK5003 + TF4002AMP	R70 ; SR70 ; SR71 (ratio 1:1,32)
TF5003SP*	VK5003 + TF4002SP	R70 ; SR70 ; SR71 (ratio 1:1)
TF5004AMP*	VK5004 + TF4002AMP	R1000 ; SR1000 ; R1400 ; R1700 ; SR1400 ; SR1700 ; SR1900 ; SR2000 ; SR2400 ; SRO2400 ; VT1708 ; VT2009B ; VT2014B ; VT2214 ; VT2412B ; VT2514B ; VTO2214B ; VTO2514B ; VT2814B ; VTO2814B (ratio 1:1,32)
TF5004SP*	VK5004 + TF4002SP	R1000 ; SR1000 ; R1400 ; R1700 ; SR1400 ; SR1700 ; SR1900 ; SR2000 ; SR2400 ; SRO2400 ; VT1708 ; VT2009B ; VT2014B ; VT2214 ; VT2412B ; VT2514B ; VTO2214B ; VTO2514B ; VT2814B ; VTO2814B (ratio 1:1)
TF5005AMP*	VK5005 + TF4002AMP	R1000 IT ; SR1000 IT ; R1400 IT ; R1700 IT ; SR1400 IT ; SR1700 IT ; SR1900 IT ; SR2000 IT ; SR2400 IT ; SRO2400 IT ; VT1708 IT ; VT2009B IT ; VT2014B IT ; VT2214 IT ; VT2412B IT ; VT2514B IT ; VTO2214B IT ; VTO2514B IT ; VT2814B IT ; VTO2B14B IT (ratio 1:1,32)
TF5005SP*	VK5005 + TF4002SP	R1000 IT ; SR1000 IT ; R1400 IT ; R1700 IT ; SR1400 IT ; SR1700 IT ; SR1900 IT ; SR2000 IT ; SR2400 IT ; SRO2400 IT ; VT1708 IT ; VT2009B IT ; VT2014B IT ; VT2214 IT ; VT2412B IT ; VT2514B IT ; VTO2214B IT ; VTO2514B IT ; VT2814B IT ; VTO2B14B IT (ratio 1:1)
TF5006AMP*	VK5004 + TF4033AMP	R1000 SR1000 ; R1400 ; R1700 ; SR1400 ; SR1700 ; SR1900 ; SR2000 ; SR2400 ; SRO2400 ; VT1708 ; VT2009B ; VT2014B ; VT2214 ; VT2412B ; VT2514B ; VTO2214B ; VTO2514B ; VT2814B ; VTO2814B ; REINFORCED (ratio 1:1)
TF5007AMP*	VK5005 + TF4033AMP	R1000IT ; SR1000 IT ; R1400 IT ; R1700 IT ; SR1400 IT ; SR1700 IT ; SR1900IT ; SR2000 IT ; SR2400 IT ; SRO2400 IT ; VT1708 IT ; VT2009B IT ; VT2014B IT ; VT2214 IT ; VT2412B IT ; VT2514B IT ; VTO2214B IT ; VTO2514B IT ; VT2B14B IT ; VTO2814B IT ; REINFORCED (ratio 1:1)
TF5008AMP*	VK5004 + TF4034AMP	R1000 SR1000 ; R1400 ; R1700 ; SR1400 ; SR1700 ; SR1900 ; SR2000 ; SR2400 ; SRO2400 ; VT1708 ; VT2009B ; VT2014B ; VT2214 ; VT2412B ; VT2514B ; VTO2214B ; VTO2514B ; VT2814B ; VTO2814B ; REINFORCED (ratio 1:1,73)

* ALSO AVAILABLE WITH ELECTRIC/MECHANIC SENSOR ON/OFF

ABER is constantly engaged in improving its products and, therefore, reserves itself the right to modify, without any further notice the characteristics shown.

REFERENCE	OBSERVATION	GEAR BOX
TF5009AMP*	VK5005 + TF4034AMP	R1000 IT ; SR1000 IT ; R1400 IT ; R1700 IT ; SR1400 IT ; SR1700 IT ; SR1900 IT ; SR2000 IT ; SR2400 IT ; SRO2400 IT ; VT1708 IT ; VT2009B IT ; VT2014B IT ; VT2214 IT ; VT 2412B IT ; VT2514B IT ; VTO2214B IT ; VTO2514B IT ; VT2814B IT ; VTO2814B IT ; REINFORCED (ratio 1:1,73)
TF5010AMP*	VK5004 + TF4035AMP	R1000 ; SR1000 ; R1400 ; R1700 ; SR1400 ; SR1700 ; SR9100 ; SR2000 ; SR2400 ; SRO2400 ; VT1708 ; VT2009B ; VT2014B ; VT2214 ; VT2412B ; VT2514B ; VTO2214B ; VTO2514B ; VT2814B ; VTO2814B ; REINFORCED (ratio 1:1,56)
TF5011AMP*	VK5005 + TF4035AMP	R1000 IT ; SR1000 IT ; R1400 IT ; R1700 IT ; SR1400 IT ; SR1700 IT ; SR1900 IT ; SR2000 IT ; SR2400 IT ; SRO2400 IT ; VT1708 IT ; VT2009B IT ; VT2014B IT ; VT2214 IT ; VT2412B IT ; VT2514B IT ; VTO2214B IT ; VTO2514B IT ; VT2814B IT ; VTO2814B IT ; REINFORCED (ratio 1:1,56)
TF5012AMP*	VK5004 + TF4036AMP	R1000 ; SR1000 ; R1400 ; R1700 ; SR1400 ; SR1700 ; SR1900 ; SR2000 ; SR2400 ; SRO2400 ; VT1708 ; VT2009B ; VT2014B ; VT2214 ; VT2412B ; VT2514B ; VTO2214B ; VTO2514B ; VT2814B ; VTO2814B ; REINFORCED (ratio 1:1,35)
TF5013AMP*	VK5005 + TF4036AMP	R1000 IT ; SR1000 IT ; R1400 IT ; R1700 IT ; SR1400 IT ; SR1700 IT ; SR1900 IT ; SR2000 IT ; SR2400 IT ; SRO2400 IT ; VT1708 IT ; VT2009B IT ; VT2014B IT ; VT2214 IT ; VT2412B IT ; VT2514B IT ; VTO2214B IT ; VTO2514B IT ; VT2814B IT ; VTO2814B IT ; REINFORCED (ratio 1:1,35)
TF5015AMP*	VK5006 + TF4002AMP	AT2412C ; AT2412AT ; AT2512C ; AT2514 ; AT2515C ; AT2812C ; ATO2512C ; ATO3112C (ratio 1:1,32)
TF5015SP*	VK5006 + TF4002SP	AT2412C ; AT2412AT ; AT2512C ; AT2514 ; AT2515C ; AT2812C ; ATO2512C ; ATO3112C (ratio 1:1)
TF5016AMP*	VK5006 + TF4033AMP	AT2412C ; AT2412AT ; AT2512C ; AT2514 ; AT2515C ; AT2812C ; ATO2512C ; ATO3112C REINFORCED (ratio 1:1)
TF5017AMP*	VK5006 + TF4034AMP	AT2412C ; AT2412AT ; AT2512C ; AT2514 ; AT2515C ; AT2812C ; ATO2512C ; ATO3112C REINFORCED (ratio 1:1,73)
TF5018AMP*	VK5006 + TF4035AMP	AT2412C ; AT2412AT ; AT2512C ; AT2514 ; AT2515C ; AT2812C ; ATO2512C ; ATO3112C REINFORCED (ratio 1:1,56)
TF5019AMP*	VK5006 + TF4036AMP	AT2412C ; AT2412AT ; AT2512C ; AT2514 ; AT2515C ; AT2812C ; ATO2512C ; ATO3112C REINFORCED (ratio 1:1,35)
VK5003	-	Adapter Kit R70 ; SR70 ; SR71
VK5004	-	Adapter Kit R1000 ; SR1000 ; R1400 ; R1700 ; SR1400 ; SR1700 ; SR1900 ; SR2000 ; SR2400 ; SR02400 ; VT1708 ; VT2009B ; VT2014B ; VT2214 ; VT2412B ; VT2514B ; VTO2214B ; VTO2514B ; VT 2814B ; VTO2814B
VK5005	-	Adapter Kit R1000 IT ; SR1000 IT ; R1400 IT ; R1700 IT ; SR1400 IT ; SR 700 IT ; SR1900 IT ; SR2000 IT ; SR2400 IT ; SR02400 IT ; VT1708 IT ; VT2009B IT ; VT2014B IT ; VT2214 IT ; VT2412B IT ; VT2514B IT ; VTO2214B IT ; VTO2514B IT ; VT2814B IT ; VTO2814B IT
VK5006	-	Adapter Kit AT2412C ; AT2412AT ; AT2512C ; AT2514 ; AT2515C ; AT2812C ; ATO2512C ; ATO3112C

POWER TAKE OFF'S
MAN | VW

REFERENCE	OBSERVATION	GEAR BOX
TF6001AMP*	-	007.1 (ratio 1:1,32)
TF6001SP*	-	007.1 (ratio 1:1)

* ALSO AVAILABLE WITH ELECTRIC/MECHANIC SENSOR ON/OFF

ABER is constantly engaged in improving its products and, therefore, reserves itself the right to modify without any further notice the characteristics shown.

POWER TAKE OFF'S AND ADAPTER KIT'S
EATON/FULLER

REFERENCE	OBSERVATION	GEAR BOX
TF7001AMP*	-	FS4106 ; FSO4106 ; FS5206 ; FSO5206 ; FS6106 (ratio 1:1,32)
TF7001SP*	-	FS4106 ; FSO4106 ; FS5206 ; FSO5206 ; FS6106 (ratio 1:1)
TF7002AMP*	VK7002 + TF4002AMP	FS5109 ; FSO5109 ; FS6109 ; FSO6109 ; FS6309 ; FSO6309 ; FS8209 ; FSO8209 ; FS8309 ; FSO8309 (ratio 1:1,32)
TF7002SP*	VK7002 + TF4002SP	FS5109 ; FSO5109 ; FS6109 ; FSO6109 ; FS6309 ; FSO6309 ; FS8209 ; FSO8209 ; FS8309 ; FSO8309 (ratio 1:1)
TF7003AMP*	-	RTS12316 ; RTS14316 ; RTS17316 ; RTSO12316A ; RTSO14316A ; RTSO17316A (ratio 1:1,32)
TF7003SP*	-	RTS12316 ; RTS14316 ; RTS17316 ; RTSO12316A ; RTSO14316A ; RTSO17316A (ratio 1:1)
TF7004AMP*	-	RTS12316 IT ; RTS14316 IT ; RTS17316 IT ; RTSO12316A IT ; RTSO14316A IT ; RTSO17316A IT (ratio 1:1,32)
TF7004SP*	-	RTS12316 IT ; RTS14316 IT ; RTS17316 IT ; RTSO12316A IT ; RTSO14316A IT ; RTSO17316A IT (ratio 1:1)
TF7007P*	-	SERIES FULLER RT ; RTO ; RTOO ; RTX ; RTF ; (Bottom ; 8 Bolts)
TF7008M*	-	6109DT/OD ; 8209 ; 8309 ; ES11109 ; (Lateral) ; Mechanic Control
TF7008P*	-	6109DT/OD ; 8209 ; 8309 ; ES11109 ; (Lateral) ; Pneumatic Control
TF7008V*	-	6109DT/OD ; 8209 ; 8309 ; ES11109 ; (Lateral) ; Vacuum Control
TF7009AMP*	VK7002 + TF4033AMP	FS5109 ; FSO5109 ; FS6109 ; FSO6109 ; FS6309 ; FSO6309 ; FS8209 ; FSO8209 ; FS8309 ; FSO8309 ; REINFORCED (ratio 1:1)
TF7010AMP*	VK7002 + TF4034AMP	FS5109 ; FSO5109 ; FS6109 ; FSO6109 ; FS6309 ; FSO6309 ; FS8209 ; FSO8209 ; FS8309 ; FSO8309 ; REINFORCED (ratio 1:1,73)
TF70011AMP*	VK7002 + TF4035AMP	FS5109 ; FSO5109 ; FS6109 ; FSO6109 ; FS6309 ; FSO6309 ; FS8209 ; FSO8209 ; FS8309 ; FSO8309 ; REINFORCED (ratio 1:1,56)
TF7012 AMP*	VK7002 + TF4036AMP	FS5109 ; FSO5109 ; FS6109 ; FSO6109 ; FS6309 ; FSO6309 ; FS8209 ; FSO8209 ; FS8309 ; FSO8309 ; REINFORCED (ratio 1:1,35)
VK7001	-	Adapter Kit FS4106 ; FSO4106 ; FS5206 ; FSO5206 ; FS6106
VK7002	-	Adapter Kit FS5109 ; FSO5109 ; FS6109 ; FSO6109 ; FS6309 ; FSO6309 ; FS8209 ; FSO8209 ; FS8309 ; FSO8309

POWER TAKE OFF'S AND ADAPTER KIT'S
MERCEDES

REFERENCE	OBSERVATION	GEAR BOX
TF8001AMP*	-	G3/36 ; G3/40 ; G3/45 ; G3/50 ; G3/55 ; G3/60 ; G3/61 (ratio 1:1,32)
TF8001SP*	-	G3/36 ; G3/40 ; G3/45 ; G3/50 ; G3/55 ; G3/60 ; G3/61 (ratio 1:1)
TF8005AMP*	VK8005 + TF4002AMP	G210 ; G211 ; G221 ; G240 ; G248 ; G260 ; G131-9 ; G231-16 ; G241-16 ; G330 (G125 ; G155 ; G180 ; G200 Current flange produced after 1990) (ratio 1:1,32)
TF8005SP*	VK8005 + TF4002SP	G210 ; G211 ; G221 ; G240 ; G248 ; G260 ; G131-9 ; G231-16 ; G241-16 ; G330 (G125 ; G155 ; G180 ; G200 Current flange produced after 1990) (ratio 1:1)
TF8007AMP*	-	G4/65 ; G4/95 ; G4/110 (ratio 1 :1.32)

* ALSO AVAILABLE WITH ELECTRIC/MECHANIC SENSOR ON/OFF

ABER is constantly engaged in improving its products and therefore reserves itself the right to modify without any further notice the characteristics shown.

REFERENCE	OBSERVATION	GEAR BOX
TF8007SP*	-	G4/65 ; G4/95 ; G4/110 (ratio 1:1)
TF8009AMP*	-	G-60 ; G-85 (ratio 1:1,32)
TF8009SP*	-	G-60 ; G-85 (ratio 1:1)
TF8010AMP*	VK8010 + TF4002AMP	G210 IT ; G211 IT ; G221 IT ; G240 IT ; G248IT ; G260 IT ; G131-9 1T ; G231-16 IT ; G241-16 IT ; G330 IT ; (G125 ; G155 ; G180 ; G200 Current flange produced after 1990) (ratio 1:1,32)
TF8010SP*	VK8010 + TF4002SP	G210 IT ; G211 IT ; G221 IT ; G240 IT ; G248IT ; G260 IT ; G131-91T ; G231-16 IT ; G241-16 IT ; G330 IT ; (G125 ; G155 ; G180 ; G200 Current flange produced after 1990) (ratio 1:1)
TF8012AMP*	-	G56-6/6,29-0,78 (ratio 1:1,32)
TF8013AMP*	VK8005 + TF4033AMP	G210 ; G211 ; G221 ; G240 ; G248 ; G260 ; G131-9 ; G231-16 ; G241-16 ; G330 (G125 ; G155 ; G180 ; G200 Current flange produced after 1990) ; REINFORCED (ratio 1:1)
TF8014AMP*	VK8005 + TF4034AMP	G210 ; G211 ; G221 ; G240 ; G248 ; G260 ; G131-9 ; G231-16 ; G241-16 ; G330 (G125 ; G155 ; G180 ; G200 Current flange produced after 1990) ; REINFORCED (ratio 1:1,73)
TF8015AMP*	VK8005 + TF4035AMP	G210 ; G211 ; G221 ; G240 ; G248 ; G260 ; G131-9 ; G231-16 ; G241-16 ; G330 (G125 ; G155 ; G180 ; G200 Current flange produced after 1990) ; REINFORCED (ratio 1:1,56)
TF8016AMP*	VK8005 + TF4036AMP	G210 ; G211 ; G221 ; G240 ; G248 ; G260 ; G131-9 ; G231-16 ; G241-16 ; G330 (G125 ; G155 ; G180 ; G200 Current flange produced after 1990) ; REINFORCED (ratio 1:1,35)
TF8017AMP*	VK8010 + TF4033AMP	G210 IT ; G211 IT ; G221 IT ; G240 IT ; G248 IT ; G260 IT ; G131-9 IT ; G231-16 IT ; G241-16 IT ; G330 IT (G125 ; G155 ; G180 ; G200 Current flange produced after 1990) ; REINFORCED (ratio 1:1)
TF8018AMP*	VK8010 + TF4034AMP	G210 IT ; G211 IT ; G221 IT ; G240 IT ; G248 IT ; G260 IT ; G131-9 IT ; G231-16 IT ; G241-16 IT ; G330 IT (G125 ; G155 ; G180 ; G200 Current flange produced after 1990) ; REINFORCED (ratio 1:1,73)
TF8019AMP*	VK8010 + TF4035AMP	G210 IT ; G211 IT ; G221 IT ; G240 IT ; G248IT ; G260 IT ; G131-9 IT ; G231-16 IT ; G241-16 IT ; G330 IT (G125 ; G155 ; G180 ; G200 Current flange produced after 1990) ; REINFORCED (ratio 1:1,56)
TF8020AMP*	VK8010 + TF4036AMP	G210 IT ; G211 IT ; G221 IT ; G240 IT ; G248 IT ; G260 IT ; G131-9 IT ; G231-16 IT ; G241-16 IT ; G330 IT (G125 ; G155 ; G180 ; G200 Current flange produced after 1990) ; REINFORCED (ratio 1:1,35)
TF8021AMP *	-	G-60 ; G-85 ; REINFORCED (ratio 1:1,73)
VK8005	-	Adapter Kit G210 ; G211 ; G221 ; G240 ; G248 ; G260 ; G131-9 ; G231-16 ; G241-16 ; G330 (G125 ; G155 ; G180 ; G200 Current flange produced after 1990)
VK8010	-	Adapter Kit G210 IT ; G211 IT ; G221 IT ; G240 IT ; G248 IT ; G260 IT ; G131-9 IT ; G231-16 IT ; G241-16 IT ; G330 IT (G125 ; G155 ; G180 ; G200 Current flange produced after 1990)

POWER TAKE OFF'S
SCANIA

REFERENCE	OBSERVATION	GEAR BOX
TF10005P*	-	GR801
TF10007P*	-	GRS890 ; GRS900 ; GRS920 ; GRS-900R ; GRSH-900
TF10009P*	-	GR-900 ; GR900R ; GRH-900
TF10011P*	-	GRS905 700 Nm Shaft 524mm
TF10012P*	-	GRS905 1200 Nm Shaft 524mm
TF10013P*	-	GRS905 700 Nm Shaft 620mm
TF10014P*	-	GRS905 1200 Nm Shaft 620mm
TF10016P*	-	GRSO905 Shaft 620 mm
TF10017P*	-	GR875 ; GR905 ; GRS895 ; GRS905 Side Mount
TF10018P*	-	GRSO905 Side Mount

* ALSO AVAILABLE WITH ELECTRIC/MECHANIC SENSOR ON/OFF

ABER is constantly engaged in improving its products and, therefore, reserves itself the right to modify without any further notice the characteristics shown.

POWER TAKE OFF'S AND ADAPTER KIT'S
IVECO

REFERENCE	OBSERVATION	GEAR BOX
TF11001P*	-	2845,6 ; 2855,6
TF11002P*	-	2865,6
TF11003P*	VK11003 + TF11002P	2870,9
TF11004P*	VK11004 + TF11002P	2895,9 (after 11/02/1998)
TF11005P*	-	2845,5 ; 2855,5
TF11006P*	VK11006 + TF11002P	2895,9 (before 11/02/1998)
TF4029M*	-	5S-200 ; 5S-300 ; 2830,5 ; Mechanic Control
TF4029P*	-	5S-200 ; 5S-300 ; 2830,5 ; Pneumatic Control
TF4029V*	-	5S-200 ; 55-300 ; 2830,5 ; Vacuum Control
TF4032M*	-	6S-380 ; 6S-400 ; 2840,6 (left side assembly) ; Mechanic Control
TF4032P*	-	6S-380 ; 6S-400 ; 2840,6 (left side assembly) ; Pneumatic Control
TF4032V*	-	6S-380 ; 6S-400 ; 2840,6 (left side assembly) ; Vacuum Control
VK11003	-	Adapter Kit 2870,9
VK11004	-	Adapter Kit 2895,9 (after 11/02/1998)
VK11006	-	Adapter Kit 2895,9 (before 11/02/1998)

POWER TAKE OFF'S
NISSAN

REFERENCE	OBSERVATION	GEAR BOX
TF12001V*	-	M5-25 E ; F ; Vacuum Control
TF12002V*	-	M5-25 A ; Vacuum Control
TF12003V*	-	M5-25 D ; Vacuum Control
TF12004V*	-	M5-35 Vacuum Control

POWER TAKE OFF'S
RENAULT

REFERENCE	OBSERVATION	GEAR BOX
TF14003P*	-	B9 ; B18 ; Pneumatic Control

* ALSO AVAILABLE WITH ELECTRIC/MECHANIC SENSOR ON/OFF

ABER is constantly engaged in improving its products and, therefore, reserves itself the right to modify without any further notice the characteristics shown.

POWER TAKE OFF'S
KAMAZ

REFERENCE	OBSERVATION	GEAR BOX
TF18002P*	-	14 ; 15 ; (ISO series) ; Pneumatic Control

POWER TAKE OFF'S
MAZ

REFERENCE	OBSERVATION	GEAR BOX
TF19002P*	-	236 ; (ISO series) ; Pneumatic Control

POWER TAKE OFF'S
SHAANXI

REFERENCE	OBSERVATION	GEAR BOX
TF22001AMP*	-	9JS (ratio 1:1,21)
TF22002AMP*	-	12JS (ratio 1:1,21)

POWER TAKE OFF'S
GAZ

REFERENCE	OBSERVATION	GEAR BOX
TF23001E*	-	3302 ; Electric Control
TF23001P*	-	3302 ; Pneumatic Control
TF23001V*	-	3302 ; Vacuum Control

POWER TAKE OFF'S
ALLISON

REFERENCE	OBSERVATION	GEAR BOX
TF10A74MREN	-	10.16P RH (ratio 1:0,74; right side assembly; EN output - ISO 4 bolt)
TF10A74MLEN	-	10.16P RH (ratio 1:0,74; left side assembly; EN output - ISO 4 bolt)
TF10A74MRB2	-	10.16P RH (ratio 1:0,74; right side assembly; SAE B output - 2 bolt)
TF10A74MLB2	-	10.16P RH (ratio 1:0,74; left side assembly; SAE B output - 2 bolt)
TF10A74MRB4	-	10.16P RH (ratio 1:0,74; right side assembly; SAE B output - 4 bolt)
TF10A74MLB4	-	10.16P RH (ratio 1:0,74; left side assembly; SAE B output - 4 bolt)

NOTE: Different internal ratio combinations can be made

* ALSO AVAILABLE WITH ELECTRIC/MECHANIC SENSOR ON/OFF

ABER is constantly engaged in improving its products and, therefore, reserves itself the right to modify without any further notice the characteristics shown.

POWER TAKE OFF'S
ZF (UNI SERIES)

REFERENCE	OBSERVATION	GEAR BOX
TF4002UNI*	-	S5-50 ; S5-90 ; S6-65 ; S6-66 ; S6-70 ; S6-75 ; S6-80 ; S6-90 (ratio 1:1,32)
TF4003UNI*	VK4002 + TF4002UNI	16-S-130 ; 16-S-160 ; 16-S-190 ; 16-S-220 ; 16-S-112/17,28 ; (trilobe) (ratio 1:1,32)
TF4004UNI*	VK4001 + TF4002UNI	8-S-151 ; 12-S-2100 ; 12-S-2300 ; 12-S-2800 ; 16-S-151 ; 16-S-181 ; 16-S-221 ; 16-S-1620 TD ; 16-S-1820 TO ; 16-S-1920 TD ; 16-S-2220 TO/TD ; 16-S-2520 TO ; 8S-1620 TD ; 8S-1820 TO ; 8S-220 TO ; 16S-2320 TD ; 16S-2330 TD ; 16S-2720 TO ; 16S-2730 TO (Z=14) (ratio 1:1,32)
TF4005UNI*	VK4005 + TF4002UNI	16-K-130 ; 16-S-112 ; 16-S-150 ; (trilobe) (ratio 1:1,32)
TF4006UNI*	VK4006 + TF4002UNI	16-S-112 A ; 16-S-130 A ; 16-S-160 A ; 16-S-190 A ; 16-S-220 A ; (trilobe) (ratio 1:1,32)
TF4011UNI*	VK4007 + TF4002UNI	16-S-151 IT ; 16-S-181 IT ; 16-S-221 IT ; 16-S-1620 TD ; 16-S-1820 TO ; 16-S-1920 TD ; 16-S-2220 TD/TO ; 16-S-2520 TO ; 16-S-1621 TD ; 16-S-1921 TD ; 16-S-2321 TD ; 16-S-2331 TD (Z=14) (ratio 1:1,32)
TF4012UNI*	VK4008 + TF4002UNI	16-S-251 IT ; 16-S-2720 TO (Z=14) (ratio 1:1,32)
TF4013UNI*	VK4009 + TF4002UNI	16-S-150 IT (trilobe) (ratio 1:1,32)
TF4015UNI*	VK4015 + TF4002UNI	5-90 GP ; 5-92 GP ; 4-120 GP (ratio 1:1,32)
TF4016UNI*	VK4016 + TF4002UNI	5-110 GPA (ratio 1:1,32)
TF4017UNI*	VK4017 + TF4002UNI	5-110 GP ; 5-111 GP ; 4-150 GP (ratio 1:1,32)
TF4018UNI*	VK4018 + TF4002UNI	9-S-75/13,16 ; 9-S-7519,56 (ratio 1:1,32)
TF4019UNI*	VK4019 + TF4002UNI	9-S-109/10,25 ; 9-S-109/10,24 ; 16-S-109/11,86 ; 16-S-109/13,53 (ratio 1:1,32)
TF4020UNI*	VK4020 + TF4002UNI	9-S-109/12,92 ; 16-S-109/13,04 ; 16-S-109/13,30 ; 16-S-109/13,42 ; 8-S-109 (ratio 1:1,32)
TF4021UNI*	VK4021 + TF4002UNI	9-S-109/12,91 ; 16-S-109/13,31 ; 16-S-109/13,41 ; 9-S-1110 TO19,48 ; 9-S-1310 TO/9,48 ; 9-S-1110 TO ; 9-S-1310 TO (ratio 1:1,32)
TF4022UNI*	VK4022 + TF4002UNI	12-AS-1800 ; 12-AS-2301 ; 16-AS-2200 ; 16-AS-2601 ; 12-AS-1630 TD ; 12-AS-1930 TD/TO ; 12-AS-2130 TD/TO ; 12-AS-2131 TD ; 12-AS-2140 TD ; 12-AS-2340 TD ; 12-AS-2430 TD ; 12-AS-2540 TD/TO ; 12-AS-2330 TO ; 12-AS-2530 TO ; 12-AS-2740 TO ; 12-AS-2940 TO ; 16-AS-2230 TD ; 16-AS-2601 DD/DD ; 16-AS-2630 TO (ratio 1:1,32)
TF4023UNI*	VK4023 + TF4002UNI	16-AS-2200 IT ; 12-AS-1800 IT ; 12-AS-2141 IT ; 12-AS-2301 IT ; 16-AS-2601 IT (ratio 1:1,32)

POWER TAKE OFF'S
VOLVO (UNI SERIES)

REFERENCE	OBSERVATION	GEAR BOX
TF5003UNI*	VK5003 + TF4002UNI	R70 ; SR70 ; SR71 (ratio 1:1,32)
TF5004UNI*	VK5004 + TF4002UNI	R1000 ; SR1000 ; R1400 ; R1700 ; SR1400 ; SR1700 ; SR1900 ; SR2000 ; SR2400 ; SR02400 ; VT1708 ; VT2009B ; VT2014B ; VT2214 ; VT2412B ; VT2514B ; VTO2214B ; VTO2514B ; VT2814B ; VTO2814B (ratio 1:1,32)
TF5005UNI*	VK5005 + TF4002UNI	R1000 IT ; SR1000 IT ; R1400 IT ; R1700 IT ; SR1400 IT ; SR1700 IT ; SR1900 IT ; SR2000 IT ; SR2400 IT ; SR02400 IT ; VT1708 IT ; VT2009B IT ; VT2014B IT ; VT2214 IT ; VT2412B IT ; VT2514B IT ; VTO2214B IT ; VTO2514B IT ; VT2814B IT ; VTO2814B IT (ratio 1:1,32)
TF5015UNI*	VK5006 + TF4002UNI	AT2412C ; AT2412AT ; AT2512C ; AT2514 ; AT2515C ; AT2812C ; ATO2512C ; ATO3112C (ratio 1:1,32)

POWER TAKE OFF'S
EATON/FULLER (UNI SERIES)

REFERENCE	OBSERVATION	GEAR BOX
TF7002UNI*	VK7002 + TF4002UNI	FS5109 ; FSO5109 ; FS6109 ; FSO6109 ; FS8209 ; FSO8209 ; FS8309 ; FSO8309 (ratio 1:1,32)

* ALSO AVAILABLE WITH ELECTRIC/MECHANIC SENSOR ON/OFF

ABER is constantly engaged in improving its products and, therefore, reserves itself the right to modify without any further notice the characteristics shown.

POWER TAKE OFF'S
MERCEDES (UNI SERIES)

REFERENCE	OBSERVATION	GEAR BOX
TF8005UNI*	VK8005 + TF4002UNI	G210 ; G211 ; G221 ; G240 ; G248 ; G260 ; G131-9 ; G231-16 ; G241-16 ; (G125 ; G155 ; G180 ; G200 Current flange produced after 1990) (ratio 1:1,32)
TF8010UNI*	VK8010 + TF4002UNI	G210 IT ; G211 IT ; G221 IT ; G240 IT ; G248 IT ; G260 IT ; G131-9 IT ; G231-16 IT ; G241-16 IT ; (G125 ; G155 ; G180 ; G200 Current flange produced after 1990) (ratio 1:1,32)

POWER TAKE OFF'S
MAZ (UNI SERIES)

REFERENCE	OBSERVATION	GEAR BOX
TF19001P*	-	236 (right side assembly) ; Pneumatic Control

POWER TAKE OFF'S
KAMAZ (UNI SERIES)

REFERENCE	OBSERVATION	GEAR BOX
TF18001P*	-	14/15 (right side assembly) ; Pneumatic Control
TF18001P2*	-	14/15 ; (Two outputs) ; Pneumatic Control

* ALSO AVAILABLE WITH ELECTRIC/MECHANIC SENSOR ON/OFF

POWER TAKE OFF'S ACESSORIES
SENSORS

	TO ORDER WITH SENSOR YOU MUST "S" TO THE PTO REF. EX: TF4001SPS
	TO ORDER WITH DIN 72585-1 SENSOR YOU MUST ADD "C" TO THE PTO REF. EX: TF4001SPC
	CABLE CONNECTOR FOR DIN 72585 SENSOR (REF. CCSEN08)

ABER is constantly engaged in improving its products and, therefore, reserves itself the right to modify without any further notice the characteristics shown.

WET KITS

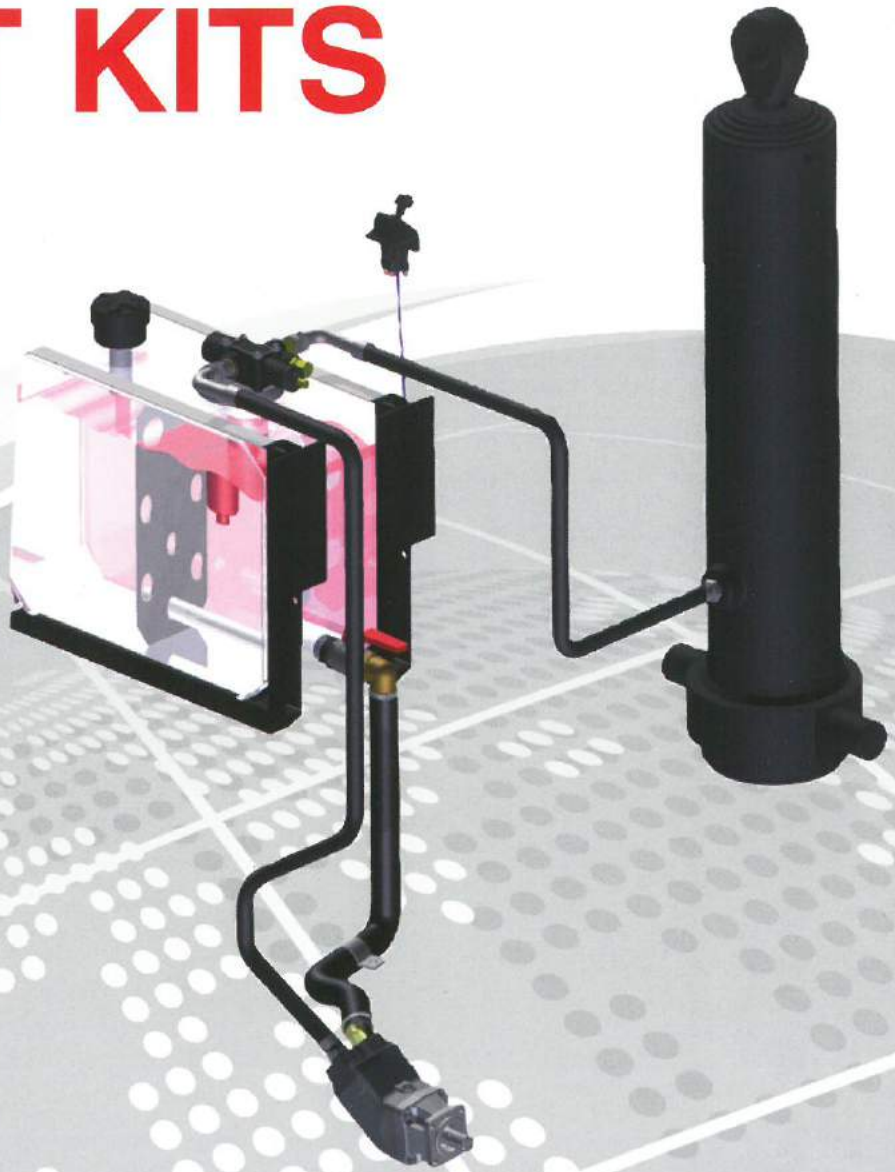

ABER are able to supply a full range of wet kits to suit various applications such as tipper, walking floor etc.

Trucks and semi-trucks that have a Power Take Off (PTO) often use wet kits. When the truck has a hydraulic pump, that pump depends on the PTO to make it operate. The hydraulic pump is used to operate the auxiliary equipment. This equipment depends on the hydraulic pump to function.

Wet kits are made up of several different parts, including PTO, pump, control valves, filters, reservoirs (tanks), and hydraulic hoses and fittings. Once the hydraulic pump has been initiated by the PTO, it will begin to push hydraulic fluid into the hoses, which lead to the cylinders. At this point, it is possible to lift the loads and carry out any other operations. Once the loads have been lifted, the discharged fluid is sent back into the reservoir, which is then recycled back into the hydraulic pump to be carried through again.

Wet kits are available in various sizes and to suit various applications, please contact ABER so that we can suggestthe best wet kitto suit your personalized requirements.

ABER is constantly engaged in improving its products and, therefore, reserves itself the right to modify without any further notice the characteristics shown.

Manufacturing Hydraulic Excellence since 1972

ABER

COMPONENTES HIDRÁULICOS
HYDRAULIC COMPONENTS
EQUIPOS HIDRÁULICOS
HYDRAULIK KOMPONENTEN
COMPOSANTS HYDRAULIQUES
ГИДРАВЛИЧЕСКИЕ КОМПОНЕНТЫ
液壓件

www.aber.eu

DISTRIBUIDOR OFICIAL

HYNESUR

SUMINISTROS DE HIDRÁULICA Y NEUMÁTICA DEL SUR, S.L.

Pol. Ind. Los Palillos, Calle 6 Nave 31
41500 Alcalá de Guadaira
SEVILLA
Tel. 954 047 523 Fax. 955 631 705
hynesur@hynesur.com